harman/kardon

AVR55

AUDIO/VIDEO
AC-3 PRO-LOGIC RECEIVER

SERVICE MANUAL

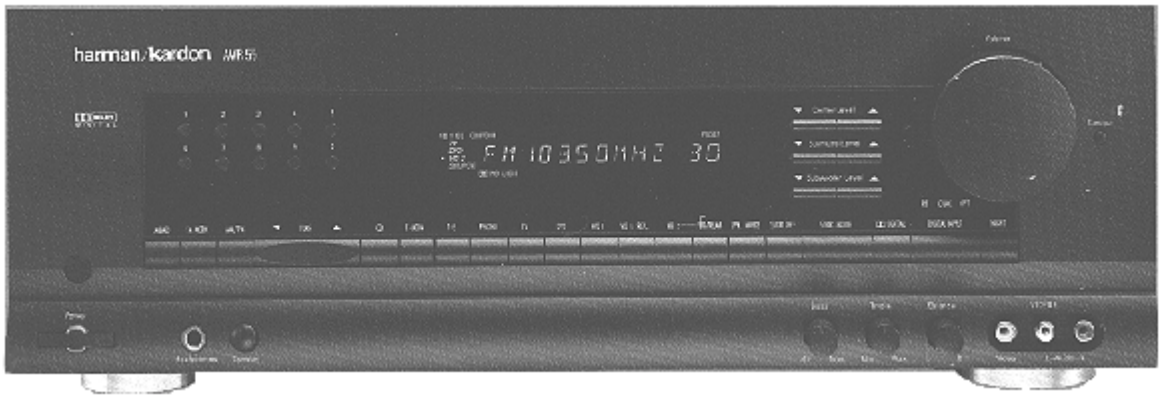

harman/kardon, Inc.
250 Crossways Park Dr.
Woodbury, New York 11797

CONTENTS

SPECIFICATIONS.....2
FRONT/REAR PANEL CONTROLS & CONNECTIONS 3
SET-UP/OPERATION GUIDE.....12
TROUBLESHOOTING 26
BLOCK DIAGRAM (UNTILED & TILED).....27
EXPLODED VIEW 32
MECHANICAL PARTS LIST 34
ELECTRICAL PARTS LIST.....35
SCHEMATICS – AMPLIFIER (UNTILED & TILED).....44
SCHEMATICS – FRONT PCB (UNTILED & TILED).....49
SCHEMATICS – INPUT PCB (UNTILED & TILED).....54
SCHEMATICS – MAIN PCB (UNTILED & TILED).....59
SCHEMATICS – PRE-IN PCB (UNTILED & TILED).....64
SCHEMATICS – AC-3 PCB (UNTILED & TILED).....69
SCHEMATICS – TUNER PCB (UNTILED & TILED).....74
WIRING DIAGRAM (UNTILED & TILED).....79

Technical Specifications

Audio Section

Stereo Mode
Continuous Average Power (FTC)

65 Watts per channel 20Hz–20kHz:
@ < 0.07% THD, both channels driven into 8 Ohms

Five-Channel Surround Mode
Power Per Individual Channel

Front L&R channels:
55 Watts per channel,
@ 0.07% THD, 20Hz–20kHz into 8 ohms

Center channel:
55 Watts, 20Hz–20kHz into 8 ohms

Surround channels:
55 Watts per channel, 40Hz–20kHz into 8 ohms

Input Sensitivity/Impedance	
Linear (High Level)	200mV/32 Kohms
Phono	3mV/47 Kohms
Signal-to-Noise Ratio (IHF-A)	
Linear (CD)	95dB
Phono	73dB
Surround System Adjacent Channel Separation	
Analog Decoding (Pro Logic, etc.)	40dB
Dolby Digital (AC-3)	55dB
Frequency Response	
@ 1W (+0, –3dB)	8Hz–100kHz
High Instantaneous Current Capability (HCC)	±35 Amps
Transient Intermodulation Distortion (TIM)	Unmeasurable
Rise Time	16 µsec
Slew Rate	40 V/µsec

FM Tuner Section

Frequency Range	87.5–108 MHz
Usable Sensitivity	IHF 1.3 µV/14.2dBf
Signal-to-Noise Ratio	Mono/Stereo 70/68dB
Distortion	Mono/Stereo 0.3/0.5%
Stereo Separation	1kHz, 40dB
Selectivity	±400 kHz 65dB
Image Rejection	98 MHz 65dB
Tuner Output Level	1kHz, ±75kHz Dev 500mV

AM Tuner Section

Frequency Range	520–1710 kHz
Signal-to-Noise Ratio	45 dB
Usable Sensitivity	Loop 500 µV
Distortion	1kHz, 50% Mod 0.8%
Selectivity	±9kHz, 25dB

General

Power Requirement	AC 120V 60Hz
Power Consumption	60W idle, 325W maximum (2 channels driven)
Dimension (Max)	
Width	17.4 inches (440 mm)
Height	6.3 inches (160 mm)
Depth	16.0 inches (406 mm)
Weight	32.6 lbs. (14.8 kg)

Depth measurement includes knobs, buttons and terminal connections.

All features and specifications are subject to change without notice.

*Trademarks of Dolby Laboratories.

†DTS is a trademark of Digital Theater Systems.

††UltraStereo is a trademark of UltraStereo Corp.

Front Panel Controls

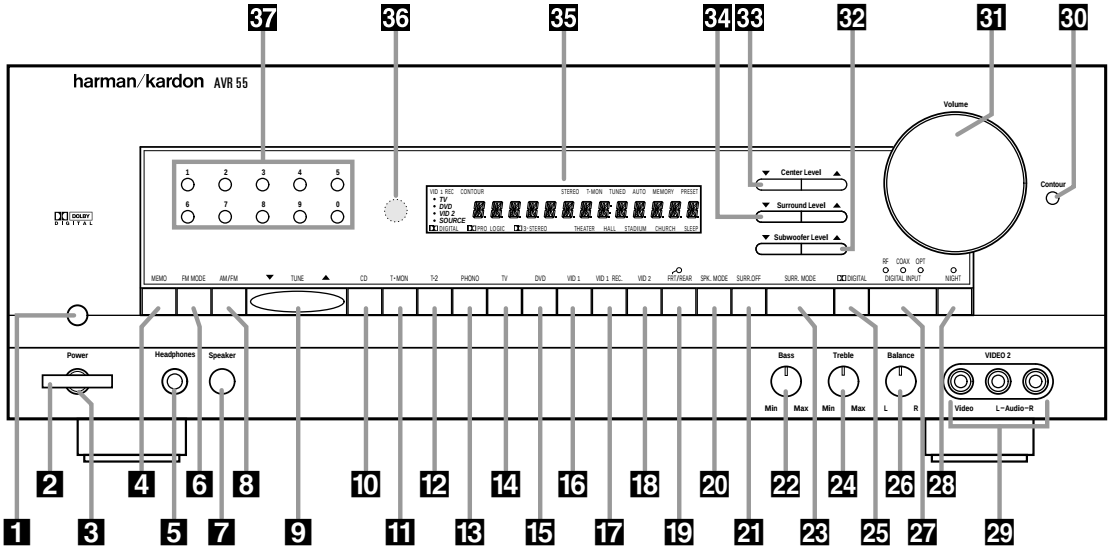

1 Main Power Switch
2 System Power Control
3 Power Indicator
4 Memo Button
5 Headphone Jack
6 FM Mode
7 Speaker Switch
8 AM/FM
9 Tuning Button
10 CD
11 Tape 1/Monitor
12 Tape 2
13 Phono
14 TV
15 DVD Input
16 Vid 1
17 Vid 1 Rec
18 Vid 2
19 Vid 2 Front/Rear
20 Speaker Mode Selector
21 Surround Off
22 Bass Control
23 Surround Mode
24 Treble Control
25 Digital Mode Selector
26 Balance Control
27 Digital Input Selector
28 Night Mode
29 Video 2 Inputs
30 Contour
31 Volume Control
32 Subwoofer Level Adjust
33 Center Level Adjust
34 Surround Level Adjust
35 Information Display
36 Remote Sensor Window
37 Numeric Keys

AVR55 120 volt

Front Panel Controls

1 Main Power Switch: Press this button to apply power to the AVR55. When the switch is pressed the unit is placed in a Standby mode, as indicated by the amber LED **3** surrounding the **System Power** control **2**. This button MUST be pressed in to operate the unit regardless of the status of the Power Switch at the bottom of the front panel. To turn the unit off and prevent the use of the remote control, this switch should be pressed until it pops out to extend from the front panel so that the word "OFF" may be read at the top of the switch.

NOTE: In normal operation this switch may be left in the "on" position.

2 System Power Control: When the **Main Power Switch 1** is pressed in, press this button to turn on the AVR55, press it again to turn the unit off. Note that the **Power Indicator** surrounding the switch **3** will turn green when the unit is on.

3 Power Indicator: This LED will illuminate in amber when the unit is in the Standby mode, to signal that the unit is ready to be turned on. When the unit is in operation the indicator will turn green.

4 Memo Button: This button is used to enter settings for speaker modes, tuner presets and delay time after making the appropriate selection.

5 Headphone Jack: This jack may be used to listen to the AVR55's output through a pair of headphones. Be certain that the headphones have a standard ¼″ stereo phone plug.

6 FM Mode: Press this button to select the stereo or mono mode for FM tuning. In the STEREO mode a STEREO indicator will illuminate in the information display, and stereo reception will be provided when stations are transmitting stereo signals. In the MONO mode the left and right signals from stereo broadcasts will be mixed together and reproduced through all channels. Select MONO for better reception of weak signals.

7 Speaker Switch: This switch controls the front left/right speakers. For normal operation it is pressed in and sound is heard through the front speakers. To silence the front left/right speakers, push the button once until it is in the "out" position. When the front speakers are turned off sound will continue to be heard through the center and rear speakers and the headphone jack.

8 AM/FM: Press this button to select the tuner as the AVR55's input source. When it is first pressed the last station tuned will appear. Press it again to change between AM and FM bands.

9 Tuning Button: Press the left side of the button to tune lower frequency stations and the right side of the button to tune higher frequency stations. When a station with a strong frequency is tuned, the **TUNED** indicator will illuminate in the **Information Display 35**. A brief (1/2 second) press of the button will manually tune to the next frequency increment, while pressing and holding the button for a longer period will automatically tune to the next station with a signal strong enough for acceptable reception.

10 CD: Press this button to select the device connected to the **CD Input** jacks ㉓ as the listening source.

11 Tape1/Monitor: Press this button to select the device connected to the **Tape 1 Play** jacks ⓫ as the listening source. The **T-Mon** indicator **K** will illuminate to indicate that the Tape Monitor has been selected, while the input being monitored will remain in the **Main Information Display F**.

12 Tape 2: Press this button to select the device connected to the **Tape 2 Play** jacks ❾ as the listening source.

13 Phono: Press this button to select the **Phono Input** ㉔ as the listening source.

14 TV: Press this button to select the device connected to the **TV/Aux** jacks ❶ as the listening and viewing source.

15 DVD Input: Press this button to select the device connected to the **DVD Play** jacks ⓭ as the listening and viewing source.

16 Vid 1: Press this button to select the device connected to the **Video 1 In** jacks ⓲ as the listening and viewing source.

17 Vid 1 Rec: Press this button to select the device that will be recorded by the device connected to the **Video 1 Out** jacks ⓮. The selected source is shown in the **Vid 1 Source** indicators **A** in the **Information Display 35**. Note that this recording will take place even if another source is being listened to.

18 Vid 2: Press this button to select the device connected to the **Video 2 Play** jacks ⓳ as the listening and viewing source.

Front Panel Controls

19 Vid 2 Front/Rear: Press this button to choose either the rear panel **Video 2 Play** jacks ⑲ or the front panel **Video 2 Inputs** 29 as the input source. When the green light above the button is illuminated, the front panel jacks are selected.

20 Speaker Mode Selector: Press this button to configure the AVR55 for the type of speakers used in your system. See page 18 for details on using this button.

21 Surround Off: Press this button to turn the surround modes off to listen to a source in traditional two-channel stereo from the front left/right speakers only.

22 Bass Control: Turn this control to modify the low frequency output of the left/right channels by as much as ±10dB. Set this control to a suitable position for your taste and room acoustics.

23 Surround Mode: Press this button to select one of the analog surround processing modes (Dolby Pro Logic, Dolby 3 Stereo, Theater, Hall, Stadium and Church) for a listening session.

24 Treble Control: Turn this control to modify the high frequency output of the left/right channels by as much as ±10dB. Set this control to a suitable position for your taste and room acoustics.

25 Digital Mode Selector: Press this button to listen to a source when a PCM or Dolby Digital (AC-3*) signal is present.

NOTE: Dolby Digital may only be used with the **CD**, **TV**, **DVD**, **Vid 1** and **Vid 2** inputs.

26 Balance Control: Turn this control to change the relative volume for the front left/right channels.

NOTE: For proper operation of the surround modes this control should be at the midpoint, or “12 O’clock” position.

27 Digital Input Selector: When the **Digital Mode Selector** 25 has been pressed, this button is used to select the type of digital input to be used.

NOTE: The coax or optical inputs may be selected with the **CD**, **TV**, **DVD**, **Vid 1** and **Vid 2** inputs. The RF input may be used with the **Vid 1** input only.

28 Night Mode: Press this button to activate the “Night” mode, preventing a loud playback when the digital modes are in use.

29 Video 2 Inputs: These jack may be used to temporarily connect an audio/video source such as a video game or camcorder to the AVR55. To select these jacks as the input, press the **Vid 2 Front/Rear** button 19 until the green LED above that button is illuminated.

30 Contour: Press this button when listening at low levels to activate special circuits that compensate for the response of the human ear at lower volumes. In the off position the unit will provide flat frequency response.

31 Volume Control: Turn the knob clockwise to increase volume, counterclockwise to decrease the volume. Note that approximately two revolutions of the knob are required to go from no output to maximum volume.

32 Subwoofer Level Adjust: Press these buttons to raise or lower the output to the subwoofer channel. These buttons should be used during normal listening sessions for touch-up adjustments, not when the test signal is being used for major system alignment.

33 Center Level Adjust: Press these buttons to raise or lower the output to the center channel. These buttons should be using during normal listening sessions for touch-up adjustments, not when the test signal is being used for major system alignment.

34 Surround Level Adjust: Press these buttons to raise or lower the output to the surround channels. These buttons should be used during normal listening sessions for touch-up adjustments, not when the test signal is being used for major system alignment.

35 Information Display: This display delivers messages and status indications to help you operate the receiver. Refer to the separate diagram for complete explanation of the FL display.

36 Remote Sensor Window: The sensor behind this window receives infrared signals from the remote control. Aim the remote at this area and do not block or cover it unless an external remote sensor is installed.

37 Numeric Keys: Press these buttons to enter or recall stations entered to the tuner’s preset memory. See page 25 for complete information on using the tuner and the preset memories.

Front Panel Information Display

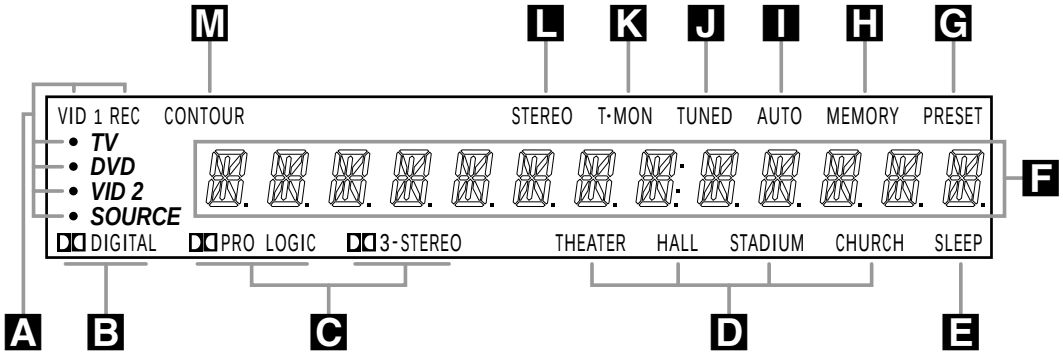

A Vid 1 Record Indicators
B Dolby Digital Indicator
C Analog Dolby Surround Mode Indicators
D Analog Surround Mode Indicators
E Sleep Indicator
F Main Information Display
G Preset Indicator
H Memory Indicator
I Auto Mode In Indicator
J Tuned Indicator
K T-Mon Indicator
L Stereo Indicator
M Contour Indicator

A Vid 1 Record Indicators: A dot appears next to one of the sources shown in this indicator to tell you which input has been selected as the output to the device connected to the **Video 1 Out** jacks ⓮. Press the **Vid 1 Rec** button 17 to change the source.

B Dolby Digital Indicator: This indicator illuminates when a Dolby Digital source is being played.

C Analog Dolby Surround Mode Indicators: These indicators illuminate when one of the analog (matrix) dolby Surround modes is in use.

D Analog Surround Mode Indicators: These indicators illuminate when one of the DSP generated analog surround modes is in use.

E Sleep Indicator: This indicator is illuminated when the Sleep function is in use. The number that appears above the indicator is the number of minutes remaining before the AVR55 will return to the Standby mode.

F Main Information Display: This display shows messages relating to the status, input source, surround mode, tuner, volume level or other aspects of unit's operation.

G Preset Indicator: This indicator illuminates when one of the stations entered into the preset memory is tuned. The number that appears below the indicator is the preset station's memory.

H Memory Indicator: This flashes after the **Memo** button 4 ㉑ has been pressed to indicate that you should quickly select and enter a preset memory location for a specific radio station.

I Auto Mode In Indicator: This indicator illuminates when the "Auto" mode is in use for FM tuning.

J Tuned Indicator: This indicator illuminates when a station is being received with sufficient signal strength to allow for acceptable listening quality.

K T-Mon Indicator: This indicator illuminates when the Tape Monitor function is in use to remind you that you are listening to the record output of the device connected to the **Tape 1 Record** jacks ⓾, not to the actual input source shown in the **Information Display**.

L Stereo Indicator: This indicator illuminates when an FM station is being tuned in stereo.

M Contour Indicator: This indicator illuminates when the Contour circuits have been engaged by pressing the **Contour** button 30.

Rear Panel Connections

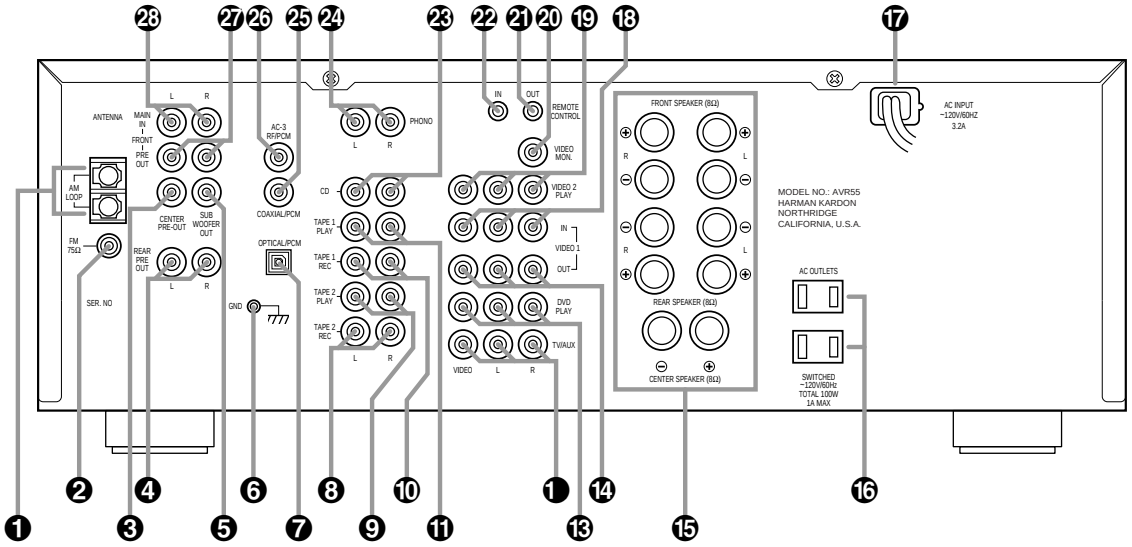

❶ AM Antenna
❷ FM Antenna
❸ Center Channel Preamp Output
❹ Rear Preamp Outputs
❺ Subwoofer Output
❻ Ground Terminal
❼ Optical/PCM Digital Input
❽ Tape 2 Rec
❾ Tape 2 Play
❿ Tape 1 Rec
⓫ Tape 1 Play
⓬ TV Inputs
⓭ DVD Input
⓮ Video 1 Outputs
⓯ Speaker Outputs
⓰ Switched Outlets
⓱ AC Power Cord
⓲ Video 1 Inputs
⓳ Video 2 Play Inputs
⓴ Video Monitor Output
㉑ Remote Control Extension Output
㉒ Remote Control Extension Input
㉓ CD Input
㉔ Phono Input
㉕ Coax Digital Input
㉖ AC-3 RF Input
㉗ Front Channel Preamp Outputs
㉘ Front Channel Main In Amp Inputs

❶ **AM Antenna:** Connect the AM loop antenna supplied with the receiver to these terminals. If an external AM antenna is used, make connections to the **AM** and **GND** terminals in accordance with the instructions supplied with the antenna.

❷ **FM Antenna:** Connect an indoor or external FM antenna to this terminal.

❸ **Center Channel Preamp Output:** These jacks may be used to connect the center channel to an optional, external power amplifier.

❹ **Rear Preamp Outputs:** These jacks may be used to connect the surround channels to an optional, external power amplifier.

❺ **Subwoofer Output:** Connect this jack to the mono line level input of an optional powered subwoofer, or your optional external subwoofer amplifier.

❻ **Ground Terminal:** Connect the ground wire from a turntable to this terminal to reduce system hum.

❼ **Optical/PCM Digital Input:** Connect the AC-3 RF output of an LV player equipped for digital audio to this jack.

NOTE: Do not connect standard analog audio sources to these jacks ❼ ㉕ ㉖.

AVR55 120 volt

Rear Panel Connections

❽ **Tape 2 Rec:** Connect the RECORD/INPUT jacks of an audio tape recorder to these jacks.

❾ **Tape 2 Play:** Connect the PLAY/OUT jacks of an audio tape recorder to these jacks.

❿ **Tape 1 Rec:** Connect the RECORD/INPUT jacks of an audio tape recorder to these jacks.

⓫ **Tape 1 Play:** Connect the PLAY/OUT jacks of an audio tape recorder to these jacks.

NOTE: The recorder connected to the **Tape 1/Mon** jacks may be monitored during a recording session by pressing the **Tape 1/Mon** button 11❹ on the front panel or remote.

❶ **TV Inputs:** Connect the audio and video outputs from a TV, Satellite receiver or other A/V source to these jacks. The signal sent to the audio jacks may also be used to trigger the TV Auto On function. (See page 23 for more information on TV Auto On.)

⓭ **DVD Input:** Connect the composite video and analog audio outputs of a DVD player to these jacks.

⓮ **Video 1 Outputs:** Connect the audio and video REC/IN jacks of your main VCR to these jacks.

NOTE: The **Video 1** jacks may be used for any video source, but when used with a VCR they will permit dubbing from one source to another while a separate source is being listened to by selecting the **VID 1 Rec** button 17.

⓯ **Speaker Outputs:** Connect these terminals to the input terminals on your front left/right, center and surround speakers.

⓰ **Switched Outlets:** These outlets provide AC power only when the AVR55 is turned on. Note that the total power draw of the products connected may not exceed 100 watts.

⓱ **AC Power Cord:** Connect this plug to an unswitched 115 volt AC outlet.

⓲ **Video 1 Inputs:** Connect the audio and video PLAY/OUT jacks of your main VCR to these jacks.

⓳ **Video 2 Play Inputs:** Connect the audio and video PLAY/OUT jacks of a VCR, DVD, LD, Satellite system or other video source to these jacks.

⓴ **Video Monitor Output:** Connect this jack to the video input of a TV or video projector to view the selected source.

㉑ **Remote Control Extension Output:** This jack may be connected to other compatible Harman Kardon products so that they will receive infrared commands captured by the AVR55's remote sensor.

㉒ **Remote Control Extension Input:** If the AVR55's front panel IR sensor is blocked due to cabinet doors or other obstructions, an external IR sensor may be used. Connect the output of the sensor to this jack.

㉓ **CD Input:** Connect the output of your CD player or D/A converter to these jacks.

㉔ **Phono Input:** Connect the output of your turntable or tone arm to these jacks. Note that only Moving Magnet (MM) type cartridges may be used.

㉕ **Coax Digital Input:** Connect the coax digital output from a DVD player, HDTV receiver, LV player or CD player to this jack. The signal may be either a Dolby Digital (AC-3) signal or a standard PCM digital source.

㉖ **AC-3 RF Input:** Connect the AC-3 RF output of an LV player equipped for digital audio to this jack.

NOTE: Do not connect standard analog audio sources to these jacks ❼㉕㉖

㉗ **Front Channel Preamp Outputs:** These jacks provide the output for the front left and right channels to an external amplifier or processor. In normal operation, unless an external power amplifier is used, the jumper pins should remain connected to the **Front Main In** jacks ㉘.

㉘ **Front Channel Main In Amp Inputs:** These jacks are the input to the AVR 51's front left/right channel power amplifier. Unless an external power amplifier is used for the left/right channels, the jumper pins should remain connected to the **Front Pre Out** jacks ㉗.

Remote Control Functions

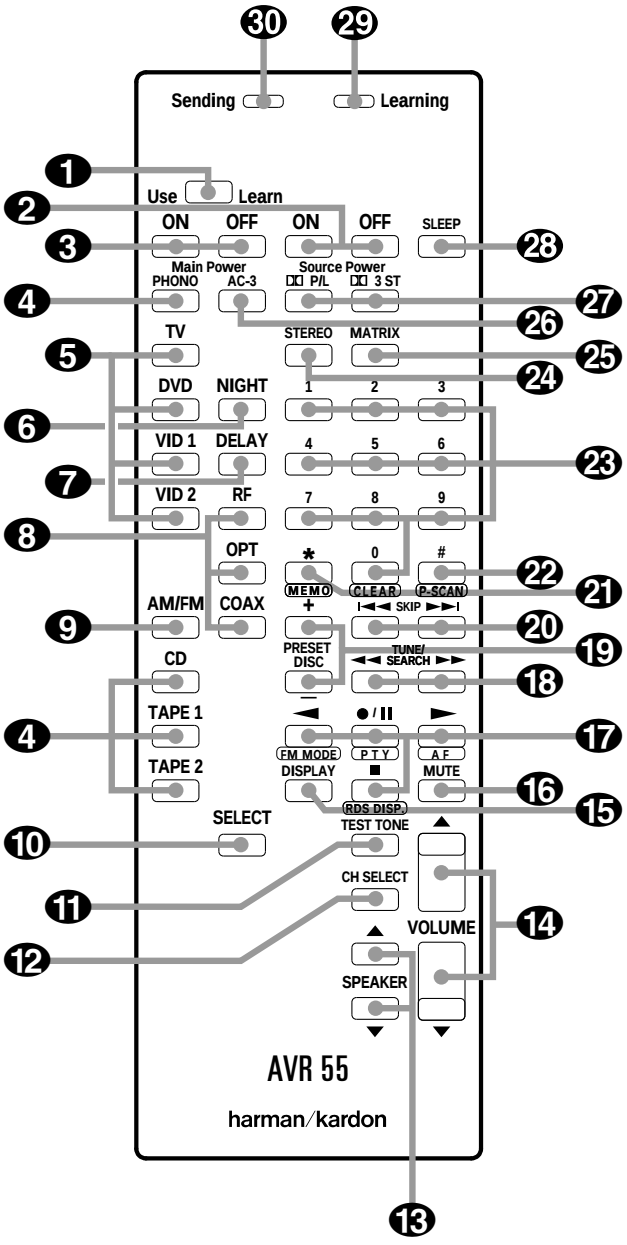

1. Use/Learn
2. Source Power
3. Main Power
4. Audio Source Selectors
5. Video Source Selectors
6. Night Mode
7. Delay
8. Digital Audio Input Selectors
9. AM/FM
10. Select
11. Test Tone
12. Channel Select
13. Speaker Level Adjust
14. Main Volume
15. Display
16. Mute
17. Transport Controls
18. Tune/Search and Fast Forward
19. Preset/Disc
20. Channel/Skip
21. Memo
22. P-Scan
23. Number Keys
24. Stereo Selector
25. Matrix Surround Modes
26. AC-3 Select
27. Dolby Surround Modes
28. Sleep
29. Learning LED
30. Sending LED

AVR55 120 volt

Remote Control Functions

❶ **Use/Learn:** This switch selects the operation mode of the remote control. Slide it to the left for normal operation. Slide it to the right when the remote is being programmed.

❷ **Source Power:** Press these buttons to control power for the last source device selected when power on/off commands have been programmed into the remote's memory.

❸ **Main Power:** Press these buttons to turn the unit on or off.

❹ **Audio Source Selectors:** Press these buttons to select any of the audio only sources (**CD**, **Phono**, **Tape 1**, **Tape 2**) as the AVR55's input.

❺ **Video Source Selectors:** Press these buttons to select any of the audio/video sources (**TV**, **DVD**, **Vid 1**, **Vid 2**) as the AVR55's input.

❻ **Night Mode:** Press this button to activate the "Night" mode, preventing loud playback when the digital modes are in use without altering the dynamic range of the output signal.

❼ **Delay:** Press this button to change the delay time, after the Delay function has been initiated by first pressing the **Select** button ❿.

❽ **Digital Audio Input Selectors:** Press one of these buttons to select a digital audio input. The digital audio source may be the same as, or different than, the analog audio source of the selected video input.

❾ **AM/FM:** Press this button to select the AVR55's tuner as an input source. Pressing this button when the tuner is in use will switch between the AM and FM bands.

❿ **Select:** Press this button to initiate the process that changes the delay time (see page 20).

⓫ **Test Tone:** Press this button to begin the adjustment of the channel output levels. The first press will circulate the test tone among the speakers. A second press enables the levels to be set for each channel (see page 19).

⓬ **Channel Select:** Press this button to view the output level for the surround or center channels. When the **Test Tone** button ⓫ has been pressed so that the Tone is audible, pressing this button will change the channel available for adjustment (see page 19).

⓭ **Speaker Level Adjust:** When setting the system output levels, press these buttons to increase or decrease the output level.

⓮ **Main Volume:** These buttons control the unit's volume. Note that all channels are controlled simultaneously.

⓯ **Display:** Press this button to reduce the brightness of the front panel display, or to turn it off completely.

⓰ **Mute:** Press this button to temporarily cut the audio output of the receiver. Press it again to return to the previous volume level.

⓱ **Transport Controls:** These buttons may be programmed to control the tape or disc motion of the last playback source selected with the **Source Selection** buttons ❹. Use them as you would the Play, Stop, Pause, Record, Reverse Play and Forward Play buttons on any VCR, CD, cassette, DVD or LD remote control. The Reverse Play button ◄ also operates the FM Mode function of the AVR55's tuner.

⓲ **Tune/Search and Fast Forward:** These buttons may be programmed to have multiple functions, which vary according to the input device selected.

a. When the **TUNER** has been selected, these buttons are used to tune stations.

b. When **CD**, **Tape**, **DVD**, **LD** or **VCR** is the input source, these buttons act as the Fast Scan Forward ►► or Fast Scan Reverse ◄◄ controls.

Remote Control Functions

⓳ **Preset/Disc:** These buttons have multiple functions, which vary according to the input device selected.

a. When the **TUNER** has been selected, these buttons will scroll up ►I or down I◄ through the stations that have been programmed in the preset memory.

b. When **CD** is selected and the unit is a CD changer, these buttons will change to the next disc + or previous disc –.

c. When **Tape 1** or **Tape 2** is the input source, and the tape machine is a compatible Harman Kardon dual cassette deck, these buttons will switch between the "A" and "B" sides.

⓴ **Channel/Skip:** These buttons have multiple functions, which vary according to the input device selected and the codes programmed from another remote.

a. When **TV**, **Vid 1** or **Vid 2** are selected, they may function as the channel up ►I or channel down I◄ tuning buttons when programmed with the codes from another unit's remote.

b. When **CD** is selected these buttons act as forward and reverse "Skip" buttons to move to the next track or chapter on the disc.

c. When a compatible Harman Kardon cassette player has been selected as **Tape 1** or **Tape 2**, these buttons move the tape forward ►I or backwards I◄ to the next selection using the Music Scan feature.

㉑ **Memo:** The memo button is used to enter settings for the tuner's preset memory and when entering speaker types. It is also used when clearing the memory.

㉒ **P-Scan:** Press this button to automatically scan through the stations preset into the tuner memory. Press the button again to end the scan when the tuner stops at the desired station.

㉓ **Number Keys:** These buttons serve as a ten button numeric keypad to enter tuner preset positions. They are also to be used to select channel numbers when **TV** has been selected on the remote, or to select track numbers on a CD, DVD or LD player, depending on how the remote has been programmed.

㉔ **Stereo Selector:** Press this button to turn the surround processing off and listen to an input in traditional two-channel (front left/right) audio.

㉕ **Matrix Surround Modes:** Press this button to select the Theater, Hall, Stadium or Church surround modes. Each press of the button cycles through the four modes (see page 23).

㉖ **AC-3 Select:** Press this button to activate the Dolby Digital mode when an appropriate digital audio source is present and the correct digital input is selected (see page 24).

㉗ **Dolby Surround Modes:** Press these buttons to select the Dolby Pro Logic or Dolby 3 Stereo modes. Use Pro Logic when surround speakers are installed, and Dolby 3 Stereo when only front speakers are available.

㉘ **Sleep:** Press this button to activate the sleep timer. Each press of the button will increase the time increment before the AVR55 goes into the Standby mode in the following order:

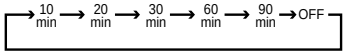

Note that the front panel display will dim when the Sleep function is active.

㉙ **Learning LED:** This indicator will illuminate when a button on the remote is being programmed with signals from another remote during the "learning" mode. The light will go out when the signal is received and memorized.

㉚ **Sending LED:** This indicator should flash any time a button is pressed to confirm that a command is being sent to the receiver or another unit. If the light is dim or does not illuminate when a button is pressed the batteries in the remote should be replaced.

Installation and Setup

System Installation
After unpacking the unit, and placing it on a solid surface capable of supporting its weight, you will need to make the connections to your audio and video equipment. These steps need to be done only when the receiver is first installed, or when a change is made to the input source equipment.

Audio Input and Output Connections
We recommend that you use high-quality cables when making connections to source equipment and recorders to preserve the quality of the signals.

When making connections to audio source equipment or speakers it is always a good practice to unplug the unit from the AC wall plug. This prevents any possibility of accidentally sending audio or transient signals to the speakers that may damage them.

1. For playback-only audio sources, such as a CD player, CD changer, tape deck or phono cartridge, connect the output jacks of the player to the appropriately labeled inputs on the rear panel ㉓ ㉔.

NOTE: When the source device has both fixed and variable audio outputs it is best to use the fixed output unless you find that the input to the receiver is so low that the sound is noisy, or high that the signal is distorted.

1. If a turntable is connected to the **Phono** input ㉔, connect the ground wire from the cartridge or tone arm to the **Ground** terminal ❻.

3. When connecting audio recording devices such as cassette recorders, open reel audio tape decks, DAT or MD, connect the PLAY/OUT jacks of the recorder to the **Play** jacks ❾ ⓫ on the AVR55. Connect the RECORD/IN jacks on the recorder to the **Tape Rec** jacks ❽ ⓾ on the AVR55.

4. Connect the output of any digital sources to be used to the appropriate connections on the AVR55 rear panel. The **Optical** and **Coaxial** digital inputs ❼ ㉕ may be used with either a Dolby Digital (AC-3) source or the output of a conventional CD or LV player's PCM (S/P-DIF) output. The **AC-3 RF** input ㉖ may ONLY be connected to the special AC-3 RF output of a laser disc player.

5. Assemble the AM Loop Antenna supplied with the unit as shown below. Connect it to the **AM** and **GND** screw terminals ❶.

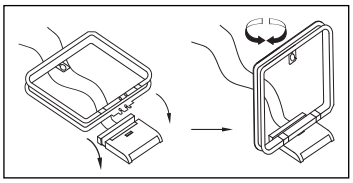

6. Connect an FM antenna to the **FM (75 ohm)** connection ❷. The FM antenna may be an external roof antenna, an inside powered or wire lead antenna, or a connection from a cable TV system. Note that if the antenna or connection uses 300-ohm twin lead cable, you must use the 300-ohm to 75-ohm adapter supplied with the unit to make the connection.

7. Connect the front, center and surround speaker outputs ⓯ to the respective speakers.

To assure that all the audio signals are carried to your speakers without loss of clarity or resolution, we suggest that you use high-quality speaker cable. Many brands of cable are available, and the choice of cable may be influenced by the distance between your speakers and this receiver, the type of speakers you use, personal preferences and other factors. Your dealer or installer is a valuable resource to consult in selecting the proper cable.

Regardless of the brand of cable selected, we recommend that you use a cable constructed of fine, multistrand copper with a gauge of 14 or larger. Remember that in specifying cable, the lower the number, the thicker the cable.

Cable with a gauge of 16 may be used for short runs of less than ten feet. We do not recommend that you use cables with an AWG equivalent of 18 or higher due to the power loss and degradation in performance that will occur.

Cables that are run inside walls should have the appropriate markings to indicate listing with UL, CSA or other appropriate testing agency standards. Questions about running cables inside walls should be referred to your installer or a licensed electrical contractor who is familiar with the NEC and/or the applicable local building codes in your area.

When connecting wires to the speakers, be certain to observe proper polarity. Remember to connect the "negative" or "black" wire to the same terminal on the receiver and the speaker. Similarly, the "positive" or "red" wire should be connected to the like terminal on the AVR55 and speaker.

NOTE: While most speaker manufacturers adhere to an industry convention of using black terminals for negative and red ones for positive, some manufacturers may vary from this configuration. To assure proper phase, and optimal performance, consult the identification plate on your speaker, or the speaker's manual to verify polarity. If you do not know the polarity of your speaker, ask your dealer for advice before proceeding, or consult the speaker's manufacturer.

8. Connections to a subwoofer are made via a line level audio connection from the **Subwoofer Output** ❺ to the line level input of a subwoofer with a built-in amplifier. If a passive subwoofer is used, the connection first goes to a power amplifier, which will be connected to one or more subwoofer speakers.

Video Input and Output Connections
Video connections are made in a similar fashion to those for audio components. Again, the use of high-quality interconnect cables is recommended to preserve signal quality.

1. Connect your VCR's audio and video OUT jacks to the **Video 1 In** jacks ⓲ on the rear panel. The audio and video IN jacks on the VCR should be connected to the **Video 1 Out** jacks ⓮ on the AVR55.

2. Connect the audio and video outputs of a satellite receiver, cable TV converter or television set or any other video source to the **TV** jacks ❶.

3. Connect the audio and video outputs of a DVD or laser disc player to the **DVD** jacks ⓳.

4. Connect the **Video Mon** ⓴ jack on the receiver to the video input of your television monitor or video projector.

System and Power Connections

The AVR55 is designed for flexible use with external control components and power amplifiers. These connections are easy to make during an initial installation, or at a later date should you choose to upgrade your system.

Remote Control Extension
If the receiver is placed behind a solid or smoked glass cabinet door, the obstruction may prevent the remote sensor from receiving commands. In this event, an optional remote sensor may be used. Connect the output of the remote sensor to the **Remote Cont. In** jack ㉒.

If other components are also prevented from receiving remote commands, only one sensor is needed. They may use this unit's sensor or a remote eye by running a connection from the **Remote Cont. Out** jack ㉑ to the Remote In jack on Harman Kardon or other compatible equipment.

External Audio Power Amplifier Connections

If desired, optional external power audio power amplifiers may be used with the AVR55. Connections may be made by connecting the **Preamp Outputs** ❸ ❹ ㉗ of the AVR55 to the inputs of the external amplifier. Before connecting the front channels to an external amplifier, remove the jumper pins connecting the **Front Channel Inputs** and **Outputs** ㉗ ㉘ and save them for future use.

AC Power Connections
This unit is equipped with two accessory AC outlets. They may be used to power accessory devices, but they should not be used with high-current draw equipment such as power amplifiers. Their total power draw may not exceed 100 watts.

These **Outlets** ⓰ will receive power only when the unit is on. These recommended for devices that have no power switch, or a mechanical power switch that may be left in the "ON" position.

NOTE: Devices with electronic power switches may only go into a Standby mode when plugged in here.

Finally, when all connections are complete, plug the **AC Power Cord** ⓱ into a non-switched 120-volt AC wall outlet. You're almost ready to enjoy the AVR55!

Remote Control Programming and Operation

This product is equipped with a powerful remote control. As supplied, it will operate the receiver, as well as most CD players and tape decks manufactured by Harman Kardon. If your equipment requires different codes, it may be programmed to copy the codes from most infrared remotes.

Loading Batteries
The life of the batteries for the remote control is about one year in normal operation. If the amber **Sending** ㉚ indicator does not flash when remote buttons are pushed, that is an indication that the batteries need to be replaced.

To change the batteries:
1. Remove the back cover by sliding it in the direction of the arrows.

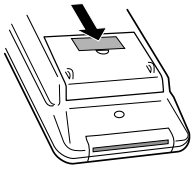

2. Remove the old batteries and insert fresh AAA type cells. Be certain to observe the correct polarity by noting the (+) and (–) marks on both the inside of the case and on the battery cells. It is recommended that both batteries be changed at the same time.

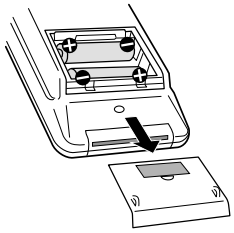

3. Close the cover until it clicks shut.

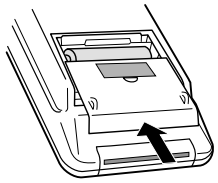

NOTE: It is important that the batteries be replaced within ten minutes after the old batteries are removed to avoid losing any remote codes that have been programmed into the remote's memory.

Remote Control Range
The remote will operate at a range of up to 15 feet from the unit, when the batteries are fully charged. The remote will also operate at an angle of up to 30° to either side of the unit.

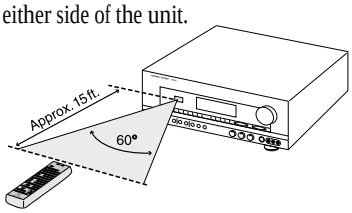

Always point the remote transmitter at the front of the unit when issuing commands. If you find that remote commands are not being received by the remote, it may be necessary to use a remote IR sensor.

Remote Programming

Programmable Keys
Many of the buttons on the remote control may be user programmed to new functions to operate virtually any component in your system. Eleven CANNOT be programmed with a new code, as they control high-level functions of the AVR55. These keys are **Main Power ON**, **Main Power OFF**, and the source input keys: **TV**, **DVD**, **VID 1**, **VID 2**, **Phono**, **CD**, **Tape 1**, **Tape 2** .

Programmable keys are divided into two groups. Some keys may be programmed with a separate function for each of the inputs. Thus, these keys may change their code when the input source is changed. (e.g., The **Play** key may transmit a different code when **CD** is selected as opposed to when **VCR** is selected.) The keys that may be programmed with multiple codes are the following:

All Numeric Keys (**0** – **9**)
Forward Play ►
Source Power On
Reverse Play ◄
Source Power Off
Stop ■
Preset Disc +
Record ●
Preset Disc –
Pause ❙❙
Channel/Skip ►I
Channel/Skip I◄
Tune/Search ►►
Memo
Tune/Search ◄◄
P-Scan

Remote Control Programming and Operation

All other keys may only be programmed with one remote code. The code contained in these keys remains the same regardless of the source selection.

WARNING: These keys transmit codes that are vital to the operation of the product. It is not recommended that they be programmed with alternative codes, as it may then be impossible to operate certain functions of the receiver.

- Night
- Delay
- RF
- Opt
- Coax
- Select
- All Mode Selectors
- *
- #
- Display
- Speaker ▲▼
- CH Select
- Volume ▲▼
- Test Tone
- Mute

To program the remote, follow these steps. Note that it is not necessary to program all keys, only those that are required to operate the subject device. Keys not programmed will retain the codes preprogrammed at the factory.

1. Slide **Use/Learn** ❶ switch at the top left corner of the remote to the right so that it is next to **Learn**.

2. If one of the multifunction buttons is being programmed press the source button (e.g. **CD**, **VID 1**) you wish to have this function associated with. If you are programming a single function key, proceed to the next step.

3. Press the button on the remote that is to be programmed. Note that the **Learning** LED ㉙ will illuminate.

4. Place the remote head to head with the remote control whose function is being learned. The two remotes should be no more than 8 inches apart.

5. Press and hold the button on the remote corresponding to the function to be memorized until the **Learning** LED starts to blink. When the LED goes out, release the button on the transmitting remote. The function code has been successfully captured by the remote.

NOTE: If both LEDs flash during a programming operation, it indicates that the remote's memory is full or that the remote codes from the transmitting remote are not compatible with the unit's signal format.

6. Continue to program any additional remote commands required using steps 2 through 5. When you have finished programming the remote, slide the **Use/Learn** switch to the left so that it is in the **Use** position.

Clearing the Remote Memory

In normal operation, codes for a new device may be programmed "over" the codes that have been previously programmed into the remote. It is also possible to clear the memory for individual keys, or for the entire remote. When a memory position is cleared, the remote will return to the original factory preset command.

To clear the memory for a specific individual key location, put the **Use/Learn** switch in the **Learn** position. Press the **Main Power Off** ❸ button and the button to be cleared at the same time. Both the **Sending** and **Learning** indicators will light momentarily. When the lights go out, the memory has been cleared of the user programmed code and returned to the factory preset. Return the **Use/Learn** ❶ switch to the **Use** position when you are finished.

To clear the remote's entire memory and return all keys to their factory preset commands, first put the **Use/Learn** ❶ switch in the **Learn** position. Then press the **Main Power On** button ❸ and confirm that the **Learning** indicator ㉙ has illuminated. While continuing to press the **Main Power On** button, press and hold the **Main Power Off** ❸ button until the **Learn** indicator goes off for about 3 seconds. It will then blink twice. Then release the two buttons. This indicates that the memory has been cleared of any user programmed commands and that the original commands have been restored. Slide the **Use/Learn** switch ❶ back to the **Use** position to return the remote to normal operation.

System Configuration

After completing all audio, video and system connections, there are a few configuration adjustments that must be made. A few minutes spent to correctly configure and calibrate the unit will greatly add to your listening experience.

Speaker Selection
The placement of speakers in a multi-channel home theater system can have a noticeable impact on the quality of sound reproduced.

No matter which type or brand of speakers is used, the same model or brand of speaker should be used for the front left, center and right speakers. This creates a seamless front soundstage, and eliminates the possibility of distracting sonic disturbances that occur when a sound moves across mismatched front channel speakers.

Speaker Placement
Depending on the type of center channel speaker in use and your viewing device, place the center speaker directly above or below your TV or in the center behind a perforated front projection screen.

Once the center channel speaker is installed, position the left and right front speakers so that they are as far away from one another as the center channel speaker is from the preferred listening position. Ideally, the front channel speakers should be placed so that their tweeters are no more than 24″ off center from the tweeter in the center channel speaker.

Depending on the specifics of your room acoustics and the type of speakers in use, you may find that imaging is improved by moving the front left and right speakers slightly forward of the center channel speaker. If possible, adjust all front loudspeakers so that they are aimed at ear height when you are seated in the listening position.

Using these guidelines, you'll find that it takes some experimentation to find the correct location for the front speakers in your particular installation. Don't be afraid to move things around until the system sounds correct. Optimize your speakers so that pans across the front of the room sound smooth, and that sounds from all speakers appear to arrive at the listening position at the same time without delay from the center speaker as opposed to the left and right speakers.

Surround speakers should be placed on the side walls of the room, at or slightly behind the listening position. The center of the speaker should face into the room. The speakers should be located so that the bottom of the cabinet is at least two feet higher than the listeners' ears when in the desired area.

If side wall mounting is not practical, the speakers may be placed on a rear wall, behind the listening position. Again, they should be located so that the bottom of the cabinet is at least two feet higher than the listeners' ears. The speakers should be no more than six feet behind the rear of the seating area.

Subwoofers produce non-directional sound, so they may be placed almost anywhere in a room. Subwoofer placement is highly influenced by room size and shape, and the type of subwoofer used. Follow the instructions of the subwoofer's manufacturer, or experiment with the best location for a subwoofer in your listening room.

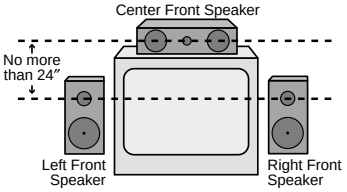

A) Front Channel Speaker Installation with Direct View TV Sets or Rear Screen Projectors

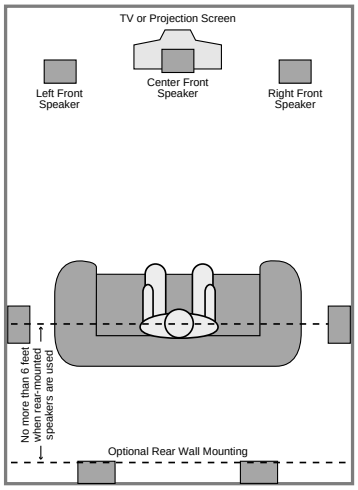

B) The distance between the left and right speakers should be equal to the distance from the seating position to the viewing screen. You may also experiment with placing the left and right speakers slightly forward of the center speaker.

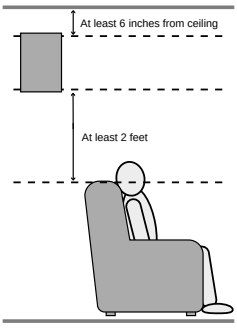

System Configuration

System Configuration
Once the speakers have been placed in their proper positions and connected to the AVR55, the final steps in the installation process involve configuration of the unit for the specific speaker types in use and the balancing of speaker output levels.

Before proceeding, check to make certain that all connections are secure and follow these steps:

1. Plug the unit into an unswitched AC outlet and press the **Main Power** button **1** until it is flush with the front panel. Note that the **Power Indicator 3** will turn orange.

2. Install the supplied AAA batteries in the remote control, as shown on page 15.

3. Press the **System Power Control 2** on the front panel or the **Main Power On** button ❸ on the remote and note that the **Power Indicator 3** will turn green.

Bass Management
The settings made during the speaker configuration process will determine which speakers receive low-frequency information, which are those sounds below 100Hz. If a subwoofer is installed, it will receive low-frequency information, and none will be sent to the front left/right speakers. If you do NOT have full-range front speakers, it is important that "NO" be selected as the subwoofer setting option to prevent damage to your front speakers.

Speaker Configuration
The next few steps tell the AVR55 which type of speakers are installed. This, in turn, configures the bass management system so that low-frequency sounds are directed to the proper speaker location.

1. Press the front panel **Surround Mode** button **23**. Press and hold the **Speaker Mode Selector 20** until the word CENTER appears in the **Information Display F**. The word LARGE, SMALL or NONE will also appear, and blink to indicate the current setting. Release the button for a second, and while the word LARGE is still blinking in the display, press the **Speaker Mode Selector 20** again until the word describing the type of center speaker installed in your system appears.

- Select LARGE if your center channel speaker is a traditional full-range speaker that is capable of reproducing frequencies below 100Hz.

- Select SMALL if your center channel speaker is a smaller "satellite" type speaker that is not capable of extended bass response or reproducing frequencies below 100Hz.

- Select NONE if no center channel speaker is installed.

2. Once you have made your selection, immediately press the **Memo** button **4** while the display is still blinking. Note that the speaker selection will change to SUBWOOFER. The word Yes or NO will blink indicating the current setting.

Press the **Speaker Mode Selector 20** again until the appropriate selection is made.

- Select YES if a subwoofer is installed. When YES is selected all low-frequency information will be sent to the subwoofer, and all front and surround speakers will only receive audio information above 100Hz.

- Select NO if no subwoofer is present. When NO is selected the front left/right and surround speakers will receive a full-range signal, and the feed to the center speaker will be based on the selection mode in the previous step.

3. While your choice is blinking in the display, press the **Memo** button **4** to enter the selection. The display will stop blinking to indicate that the setting is entered and then return to normal.

NOTES:
- In order to enter the speaker configuration, the **Speaker Switch 7** must be in the "in" position.

- In order to enter information for the center speaker, the AVR55 must be in the Dolby Pro Logic or Dolby 3 Stereo mode. To select either of these modes, press the front panel **Surround Mode Selector 23** or one of the **Dolby Surround Mode** buttons ❷❼ on the remote.

System Configuration

Speaker Output Adjustments
Adjustments and calibration of the speaker output levels is important to proper surround operation. During this process, the unit is adjusted so that the output levels from each channel is set so that all channels have a reference level that is as close to one another as possible. A small amount of time spent to properly calibrate the AVR55's output levels will enable the unit to deliver all the performance it is capable of within the environment of your specific listening room.

IMPORTANT NOTE: Many listeners are often confused about the operation of the rear (surround) channels. While some assume that sound should always be coming from each speaker, most of the time there will be little or no sound in the surround channels. This is because they are only used when a movie director or sound mixer specifically places sound there to create ambiance, an effect or to continue action from the front of the room to the rear. When the output levels are properly set it is normal for rear/surround speakers to operate only occasionally. Artificially increasing the volume to the rear speakers may destroy the illusion of an enveloping sound field that duplicates the way you hear sound in a movie theater or concert hall.

Before beginning the adjustment process make certain that all speaker connections have be properly made. The system volume should be set to the level that you will use during a typical listening session. Finally, make certain that the **Balance Control** 26 is set to the center "12 O'clock" position.

1. Press the **Test Tone** button ⓫ on the remote to begin the adjustment process. A test noise will circulate from one speaker channel to the next, as indicated in the **Information Display** F.

2. Take a minute to listen to the test noise from each speaker as the location indicated in the display changes. Check to make certain that, for example, when the display reads TEST-FRONT L, that the test noise is coming from the front left speaker. If the test tone's location does not match the display for any channel, press the **Test Tone** button ⓫ to end the adjustment and turn the unit off using the **Main Power Switch** 1. Check all connections to maker certain the **Speaker Outputs** ⓯ are connected to the proper speaker.

Installation Hint: While the test tone is circulating among the channels, make a note if it sounds reasonably equal in volume, or if one channel or more channels seems significantly louder than the others.

3. When you have verified that all channels are properly connected, press the **Channel Select** button ⓬ to begin the adjustment process.

4. The Test Tone will stop circulating and be heard through the center channel only. If the center channel appeared to be at a level above or below the front left/right channels while the tone was circulating, press the **Speaker Level Adjust** buttons ⓭ to raise or lower the volume so that the tone is the same level as the other channels. When the adjustment is complete, press the **Channel Select** button ⓬ to move to the next channel.

5. The Test Tone will now be heard through the right surround speaker. As with the center channel speaker, use the **Speaker Level Adjust** buttons ⓭ to adjust the level as required so that the tone is the same level as the other channels. When the adjustment is complete, press the **Channel Select** button ⓬ to move to the next channel.

6. The Test Tone will now be heard through the left surround speaker. As with the previous channels, use the **Speaker Level Adjust** buttons ⓭ to adjust the level as required so that the test tone is the same level as the other channels. When the adjustment is complete press the **Test Tone** button ⓫ twice so that the tone momentarily stops, and then begins to circulate.

7. Listen carefully and check to see if the tone is now at the same volume level from each channel. If further adjustment is required, press the **Channel Select** button ⑫ and repeat steps 4 through 7 as shown above. Repeat the procedure as often as needed until the test tone circulates and has the same volume from each channel.

8. When all adjustments have been made, press the **Test Tone** button once to return to normal operation.

Delay Settings

One aspect of the surround modes is the delay of audio signals between the front speakers and the rear speakers. Each surround mode is factory preset with a specific delay time, but it is possible to individually adjust the delay timing to custom tailor the sound to your individual taste and the acoustic conditions in your listening room or home theater.

The factory setting is appropriate for most rooms, but some installations create an uncommon distance between the front and surround speakers that may cause the arrival of front channel sounds to become disconnected from surround channel sounds.

To resynchronize the front and surround channels, follow these steps:

1. Measure the distance from the listening/viewing position to the front speakers.

2. Measure the distance from the listening/viewing position to the surround speakers.

3. Subtract the distance to the surround speakers from the distance to the front speakers.

a. When setting the delay time for the Dolby Digital surround mode, the optimal delay time is the resulting figure. For example, if the front speakers are ten feet away and the surround speakers are five feet away, the optimal delay time is figured as 10-5=5. Thus, in this example, the delay should be set at five milliseconds.

b. When setting the delay time for an analog surround mode (Pro Logic, Hall, Movie or Matrix) take the result of the subtraction and add 15 to obtain the optimal delay time. For example, if the front speakers are ten feet away and the surround speakers are five feet away, the optimal delay time is figured as 10-5+15=20. Thus in this example, the delay should be set at twenty milliseconds.

With the correct delay time figures for your listening room calculated, first make certain that the unit is in the Dolby Pro Logic mode by pressing the **Surround Mode** button 23 or **Dolby Surround Mode** buttons ㉗ until the **Pro Logic** indicator C is illuminated.

Press the **Select** button ⑩ to begin the adjustment process. The **Information Display** F will show the current delay setting, such as REAR - 15mS. If adjustment is required, immediately press the **Delay** button ⑦ on the remote to change the setting until it is closest to the desired time. Within five seconds the display will return to normal readout and the setting will be entered.

The Dolby Digital mode also provides a separate setting for the center channel delay mode, since the discrete nature of Dolby Digital signals makes the location of the center channel speaker more critical. To set the delay for the center channel, measure the distance from the preferred listening position in the center of the room to both the center channel speaker and either the left or right speaker.

If the distances are equal, no further adjustment is required, and the center delay should be set to zero. If the distance to the front speakers is greater than the distance to the center speaker you may wish to reposition the speakers by moving the front left/right speakers closer to the listening position or the center speaker further away from the listening position.

If repositioning of the speakers is not possible, adjust the center delay time so that you add one millisecond of center channel delay for each foot that the distance to the center speaker lags behind the front speakers. For example, if the front left/right speakers are each 10 feet from the listening position and the center channel speaker is 8 feet away, the delay is figured as 10-8=2, suggesting an optimal center delay of 2 milliseconds.

To change the delay settings for Dolby Digital operation, first calculate the correct timings as outlined above. Next, make certain that the AVR55 is in the Dolby Digital mode by pressing the **Dolby Digital/AC-3** button 25 26 on the front panel or remote. Make certain that the **Dolby Digital Indicator** B is illuminated.

Next, press the **Select** button 10 to begin the adjustment process. The **Information Display** F will show the current setting, such as

REAR - 15 mS.

If adjustment is required, immediately press the **Delay** button 7 on the remote to change the setting until it is closest to the desired time. Within five seconds the display will return to normal readout and the setting will be entered.

To adjust the delay settings for Dolby Digital, press the **Select** button 10 and note that the **Information Display** F will show the settings for both the center and rear/surround delay as

C - 0 mS R - 10 mS.

The center channel delay will blink, indicating that you may change the setting.

Press the **Delay** button 7 to change the center delay time to the desired setting. When the appropriate number is shown press the **Select** button 10 once so that the number for rear/surround delay time on the right side of the display blinks.

Use the **Delay** button 7 to change the rear/surround delay to the desired setting.

When both settings are correct, press the **Select** button 10 again and note that the display will stop blinking. After a few seconds the display will return to normal operation and the settings will be entered to memory.

Operation

Basic Operation

Once you have completed the setup and installation of your new receiver, it is simple to operate and enjoy. The following instructions will provide the steps needed to enjoy the AVR55

• When using the AVR55 for the first time, it is necessary to press the **Main Power** button 1 on the front panel to turn the unit on. This places the unit in a standby mode, as indicated by the amber color of the **Power Indicator** 3. Once the unit is in standby, you may begin a listening session by pressing the **System Power Control** 2 on the front panel or the **Main Power** button ❸ on the remote. Note that the **Power Indicator** 3 will turn green. This will turn the unit on and return it to the input source that was last used. The unit may also be turned on from standby by pressing any of the **Source Selector** buttons on the remote ❹ ❺ ❾ or front panel 8 10 13 14 15 16 18 22.

To turn the unit off at the end of a listening session simply press the **System Power Control** 2 on the front panel or the **Main Power** button ❸ on the remote. Power to any equipment plugged into the rear panel **Switched Outlet** ⓰ will be shut off and the **Power Indicator** 3 will turn amber.

When the remote is used to turn the unit "off" it is actually placing the system in a standby mode, as indicated by the amber color of the power switch ring.

When you will be away from home for an extended period of time it is always a good idea to completely turn the unit off using the front panel **Main Power Switch** 1. Note that all preset memories are lost if the unit is left turned off with the **Main Power Switch** 1 for more than two weeks.

Source Selection

• To select a source at any time, press any of the **Source Selector** buttons on the remote ❹ ❺ ❾ or front panel 8 10 13 14 15 16 18 22.

• The front panel **Audio/Video Inputs** 29 may be used to connect a device such as a video game or camcorder to your home entertainment system on a temporary basis. To listen to and view the output of the playback unit connected to these inputs, first press the **Vid 2 Input Selector** 18 ❺, and then press the **Vid 2 Front/Rear** button 19. When the front panel inputs are selected, a green LED will illuminate above the selector button.

• When an audio source is selected the last video input used remains routed to the **Video 1** and **Monitor Outputs** ⓮ ⓴. This permits simultaneous viewing and listening to different sources.

• During a listening session you may wish to adjust the **Bass** 22 and **Treble** 24 controls to suit your listening tastes.

• At lower volume levels you may wish to engage the **Contour** button 30. This boosts the low- and high-frequency sounds in accordance with what are known as the Fletcher-Munson hearing curves to compensate for the response of human hearing at low sound levels.

• Adjust the volume to a comfortable level using the front panel **Volume Control** 31 or remote **Volume Up/Down** ⓮ buttons.

• To temporarily silence all speaker outputs press the **Mute** button ⓰. This will cut the output to all speakers, but it will not effect any recording or dubbing that may be in progress. When the system is muted the word MUTE will flash in the information display. Press the **Mute** ⓰ button again to return to normal operation.

• For private listening, plug the 1/4″ stereo phone plug from a pair of stereo headphones into the front panel **Headphone** jack 5. To cut the speaker output when using headphones, press the **Speaker** button 7 so that it is in the extended position from the front panel.

• When one of the **Video** inputs 14 15 16 18 ❺ is selected the video signal for that input will be routed to the **Video Monitor** output jack ⓴ and will be viewable on a TV monitor connected to the AVR55. Make certain that your TV is set to the proper input to view the signal.

• In some installations it may be desirable to dim or extinguish the front panel lights. This may be done by pressing and holding the **Display** button ⓯ on the remote or front panel. The first press will dim the lights to one half normal brightness, and a second press will turn them totally off. Press the button again to return the lights to normal brightness. Note that the **Power Indicator** will remain lit at all times as a reminder that the unit is turned on.

• To program the AVR55 for automatic turn off, press the **Sleep** button ㉘ on the remote. Each press of the button will increase the time before shut down in the following sequence:

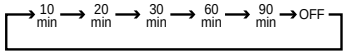

The sleep time will be displayed on the right side of the **Information Display** **F**, and it will count down until the time has elapsed.

When the programmed time has elapsed the unit will automatically turn off. Note that the front panel display will dim to one half brightness when the Sleep function is programmed. To cancel the Sleep function, press the **Sleep** button ㉘ until the information display returns to normal brightness and the Sleep indicator numbers disappear.

TV Auto-On

The AVR55 is capable of automatic operation that turns it on and off in response to the operation of an audio source such as the TV. This eliminates the need to manually turn on the AVR55 with a separate remote command. While this feature is most commonly used with TV audio, it may be used with any audio source. To use the TV Auto-On feature follow these steps:

1. Connect the audio source that will be used to trigger the Auto-On feature to the **TV Inputs** ❶.

2. Activate the feature by pressing and holding the **TV Input** button 14 ❺ on the front panel or remote until the words `AUTO-OFF` appear in the **Information Display** **F**.

3. Release the button, and then press it again within 2.5 seconds until the display changes to read `AUTO-ON` and then release the button.

4. The TV Auto-On feature is now engaged. Whenever an audio source is present at the TV input and the AVR55 is in the Standby mode the unit will automatically turn on and switch to the TV input.

5. Unless another input source is selected, the unit will automatically return to the Standby mode approximately five minutes after the audio source connected to the TV input is turned off.

NOTE: Remember that when the TV Auto feature is engaged the AVR55 will turn off whenever the TV input has been selected and the source feeding that input is not active. To disable this feature follow steps 2 and 3 above, but toggle the buttons so that the words `AUTO-OFF` appear in the **Information Display** **F**.

Surround Mode Selection

One of the most important features of the AVR55 is its ability to reproduce a full multichannel surround soundfield from Dolby Digital sources, analog matrix surround encoded programs, and standard stereo programs. In all a total of seven listening modes are available on the AVR55.

Selection of a surround mode is based on personal taste, as well as the type of program source material being used. For example, motion pictures bearing the logo of one of the major surround encoding processes, such as Dolby Surround, DTS† Stereo or UltraStereo†† may be played in either the Dolby Digital, Dolby Pro Logic or Movie Surround depending on the source material. TV or radio broadcasts of programs in surround, but not originally produced as theatrical motion pictures should normally be played back in Dolby Pro Logic or one of the other analog surround modes.

NOTE: Once a program has been encoded with surround information, it retains the surround matrix as long as the program is broadcast in stereo. Thus, movies with surround sound will carry surround information when they are broadcast via conventional TV stations, cable, pay TV and satellite transmission. In addition, a growing number of made-for-television programs, sports broadcasts, radio dramas and music CDs are also recorded in surround sound. You may obtain a list of these programs and discs from the Dolby Laboratories web site at www.dolby.com

Surround modes for conventional analog audio inputs are selected by pressing the **Surround Mode** button 23 on the front panel or the **Matrix** and **Dolby Mode** buttons ㉕ ㉗ on the remote. As described above, when a "Surround Sound" logo is associated with the program you are listening to, it is always best to start with Dolby Pro Logic, or Dolby 3-Stereo when there are no surround speakers. However, you may wish to experiment with the Theater, Hall, Church or Stadium modes to see if you find that sound more pleasing. Remember, you can't break anything by trying a different surround mode.

When a program is not listed as carrying intentional surround information, you will find that the Pro Logic or Dolby 3-Stereo often deliver enveloping surround presentations through the use of the natural information present in all stereo recordings. However, for stereo, but non-surround programs, we suggest that you try one of the other analog surround modes to see which one is most suitable.

To listen to a program in traditional two-channel stereo, with only the front left and right speakers plus the subwoofer, if installed, press the **Stereo** button ㉔ on the remote or the **Surround Off** button 21 on the front panel.

Dolby Digital

Dolby Digital (also known as AC-3) is the latest advancement in surround sound technology, delivering up to five full-range surround channels (left, center, right, left surround and right surround) plus a special dedicated Low-Frequency Effects (LFE) channel. This represents a major advancement over traditional analog surround in that each surround channel is fully discrete and capable of full bandwidth reproduction. Dolby Digital is available on DVD and LV discs, and it will be a part of the new high-definition television (HDTV) system when digital broadcasting begins in 1998. Dolby Digital for the home is based on the same system used to deliver digital audio soundtracks in movie theaters, enabling true cinema reproduction in your home.

To utilize the Dolby Digital mode you must have a digital source properly connected to the AVR55. The RF digital output of a laser disc player should be connected to the **AC-3 RF** jack ㉖ on the rear panel. Note that this jack is for use *only* with the AC-3 RF output from an LV player and should not be connected to any other audio, video or digital device. Digital datastream outputs from DVD players, HDTV receivers and CD players should be connected to the **AC-3/PCM Optical** or **Coaxial** inputs ❼ ㉕ on the rear panel. In order to provide a backup signal and a source for recording, the analog outputs provided on digital source equipment should also be connected to their appropriate rear panel inputs (e.g., connect the analog stereo audio output from a DVD to the **DVD** inputs ⓭ on the rear panel when you connect the digital outputs).

Dolby Digital sources must be used in conjunction with one of the video related inputs: DVD, TV, Vid 1 or Vid 2. First select one of these sources so that the video appears at the unit's output before choosing digital audio. Next, press the **Digital Input** button 27 ❽ that corresponds to the type of digital input used. An LED will light above the data type selected, and a message will scroll across the **Information Display** F to confirm your choice.

Finally, press the **AC-3/Dolby Digital** button ㉖ 25 to select Dolby Digital. The mode name will briefly scroll in the **Information Display** F, and the **Dolby Digital** indicator B will illuminate.

Night Mode

A special feature of Dolby Digital is the Night mode, which enables AC-3 input sources to be played back with their full range while reducing the minimum peak level by 1/4 to 1/3. This prevents abruptly loud transitions from causing disturbances without reducing the impact of the digital source. The Night mode is available only when AC-3 signals with special data are being played.

To engage the Night mode, press the **Night** button 28 ❻ and note that the indicator will illuminate above the **Night** button on the front panel.

IMPORTANT NOTES ON DOLBY DIGITAL PLAYBACK:

1. The AVR55 will decode digital audio sources with a sampling frequency of 32 kHz, 44.1 kHz and 48 kHz. Although this will enable it to decode virtually all DVD movies and HDTV sources, it is possible that some digital sources may not be compatible with the AVR55.

2. The AVR55 will automatically detect most Dolby Digital sources. It is possible, however, that future source equipment that could not be anticipated at this time, may require manual surround mode selection or analog playback.

3. Note that not all programs recorded in Dolby Digital contain full 5.1 channel audio. Consult the program guide that accompanies the DVD or Laser Disc to determine which type of audio has been recorded on the disc. The AVR55 will automatically sense the type of digital surround encoding used on an AC-3 program source and adjust to accommodate it.

4. When a Dolby Digital source is playing, you may not select one of the analog surround modes.

5. It is not possible to record the output of a Dolby Digital program.

Operation

PCM Audio Playback

PCM (Pulse Code Modulation) is the non-compressed digital audio system used for compact discs and non-AC-3 laser discs. The digital circuits in the AVR55 are capable of high-quality digital-to-analog decoding, and they may be connected directly to the digital audio output of your CD or LV player.

Connections should be made to the **AC-3/PCM Optical** or **Coaxial** inputs ❼ ㉕ on the rear panel, using whichever input is not occupied by an AC-3 source such as a DVD player.

IMPORTANT NOTE: PCM Audio playback is possible ONLY when the CD input is selected. If you wish to use the AVR55 to decode the PCM audio track from a Laser Disc player, you must first select the CD input.

Tuner Operation

The AVR55's tuner is capable of tuning AM, FM and FM Stereo broadcast stations. Stations may be tuned manually, or they may be stored as favorite station presets and recalled from a 30 position memory.

Station Selection

1. Press the **AM/FM** button 8 ❾ to select the tuner as an input.

2. Press the **AM/FM** button 8 ❾ again to switch between AM and FM so that the desired frequency band is selected.

3. Press the **Tuning Mode** button 6 ⓱ to select manual or automatic tuning.

When the AUTO indicator is illuminated in the main information display the tuner will only stop at those stations that have a strong enough signal to be received with acceptable quality.

If the AUTO indicator is NOT illuminated, the tuner is in a manual mode and will stop at each frequency increment in the selected band.

4. To select stations from the front panel press the **Tune** button 9. When AUTO indicator is illuminated each press will cause the tuner to search for the next highest or lowest frequency station that has an acceptable signal. When tuning FM stations in the auto mode, the tuner will only select Stereo stations. To tune to the next station, press the button again. If the AUTO indicator is NOT illuminated, tap the **Tune** button 9 to advance one frequency increment at a time, or press and hold it to locate a specific station. When the TUNED indicator illuminates the station is properly tuned and should be heard with clarity. To listen to the station in stereo, press the **FM Mode** button 6 until the red STEREO indicator illuminates in the front panel display.

5. To select stations using the remote, press the **Manual Tune** ◀◀ / ▶▶ buttons ⓲ to select stations one at a time. Alternatively, the **Automatic Tune** ⏮ / ⏭ buttons ㉑ may be used to scan only those stations with sufficient strength for proper reception. Each press of these buttons will advance the tuner to the next station. For FM stereo reception press the **FM Mode** button 6 ⓱ until the STEREO indicator is illuminated.

NOTE: When the FM reception of a station is weak, audio quality will be increased by switching to mono mode by pressing the **Tuning Mode** button 6 ⓱ until the STEREO indicator goes out.

Preset Tuning

Up to 30 stations may be stored in the AVR55's memory for easy recall using the front panel controls or the remote.

To enter a station to the memory, first tune the station using the steps outlined above. Then:

1. Press the **Memo** button 4 ㉑ on the front panel or remote. Note that the MEMORY indicator will illuminate and flash in the information display.

2. Within five seconds, press the **Numeric Buttons** 3 7 ㉑ corresponding to the location where you wish to store this station's frequency. To enter a station to memory location "30," press only the **0** button.

3. Repeat the process after tuning any additional stations to be preset.

Recalling Preset Stations

• To manually select a station previously entered in the preset memory, press the **Numeric Buttons** 3 7 ㉑ corresponding to the desired station's location. To select the station in location "30," press the **0** button only.

• To manually tune through the list of stored preset stations one by one, press the **Preset/Disc Skip** buttons ⓳ on the remote.

• To automatically scan through the stations entered in the preset memory, press the **P·Scan** button ㉒ on the remote. The tuner will run through the list of preset stations, stopping for five seconds at each one. Press the **P·Scan** button again to stop the scan at your desired station.

Tape Recording

In normal operation, the audio or video source selected for listening through the AVR55 is sent to the record outputs. This means that any program you are watching or listening to may be recorded simply by placing machines connected to the outputs for **Tape 1** or **Tape 2** ⑩ ⑧ in the record mode.

When a tape recorder with separate record and playback heads is used, you may monitor the output of the recording by selecting the **Tape 1/Monitor** input 11 ④. Note that the **T·MON** indicator K will illuminate in the front panel display to remind you that you are listening to the record playback instead of the actual input source being recorded.

Video Recording

The AVR55 permits you to make a video recording from one of the input sources while another source is being listened to through the unit's main amplifiers.

To make a video recording, press the **Video 1 Record** button 17 and observe the indicator dot at the far left side of the front panel **Information Display** 35. As you press the **Record** button, the **Video 1 Record** indicator A will change to show which output is being sent to the **Video 1 Out** jacks ⑲. The output may be either the current listening source, or one of the other video inputs (TV, DVD, Video 2).

IMPORTANT NOTE: Please make certain that you are aware of the copyright restrictions on any material you copy. Unauthorized duplication of copyrighted materials is prohibited by Federal law.

Output Level Trim Adjustment

Normal output level adjustment for the AVR55 is established using the Test Tone, as outlined on page 19. In some cases, however, it may be desirable to adjust the output levels using program material such as a test disc, or a selection you are familiar with.

To adjust the output levels using program material, first set the reference volume for the front left/right channels using the **Volume Control** 31 ⑭. If you wish to vary the difference between the left and right channels, use the **Balance Control** 26.

To change the level for the channels you wish to adjust use the appropriate front panel level adjust control for the **Subwoofer**, **Center** or **Surround** channels 32 33 34.

Memory Backup

This product is equipped with a memory backup system that preserves tuner presets and system configuration information if the unit is accidentally unplugged or subject to a power outage. This memory will last for approximately one week, after which time all information must be re-entered.

Processor Reset

In the rare case where the unit's operation or the displays seem abnormal, the cause may involve the erratic operation of the system's memory or microprocessor.

To correct this problem, first unplug the unit from the AC wall outlet and wait at least three minutes. After the pause, reconnect the AC power cord and check the unit's operation. If the system still malfunctions, a system reset may clear the problem.

If the system is still operating incorrectly, there may have been an electrostatic discharge or severe AC line interference that has corrupted the memory or microprocessor.

If a reset does not solve the problem, consult an authorized Harman Kardon service depot.

Troubleshooting Guide

Troubleshooting Guide

SYMPTOM	*CAUSE*	*SOLUTION*
No front panel lights when power switch is pressed	• No AC Power	• Make certain AC power cord is plugged into a live outlet. • Check to see if outlet is switch controlled.
Display lights, but no sound or picture	• Intermittent input connections • **Mute** is on • Volume control is down	• Make certain that all input and speaker connections are secure. • Press **Mute** button. • Turn up volume control.
No sound from any speaker. Light around power switch is red	• Amplifier is in protection mode due to possible short • Amplifier is in protection mode due to internal problems	• Check speaker wire connections at receiver and speaker ends for shorts. • Contact your local Harman Kardon service depot.
No sound from surround or center speakers	• Incorrect surround mode • Input is monaural • Incorrect configuration	• Select a mode other than Stereo. • There is no surround information from mono sources. • Check speaker mode
Unit does not respond to remote commands	• Weak batteries in remote. • Remote is in **Learn** position • Remote sensor is obscured	• Change remote batteries. • Slide **Use/Learn** switch to **Use**. • Make certain front panel sensor is visible to remote.
Intermittent buzzing in tuner	• Local interference	• Move unit or antenna away from computers, fluorescent lights, motors or other electrical appliances.

BLOCK DIAGRAM

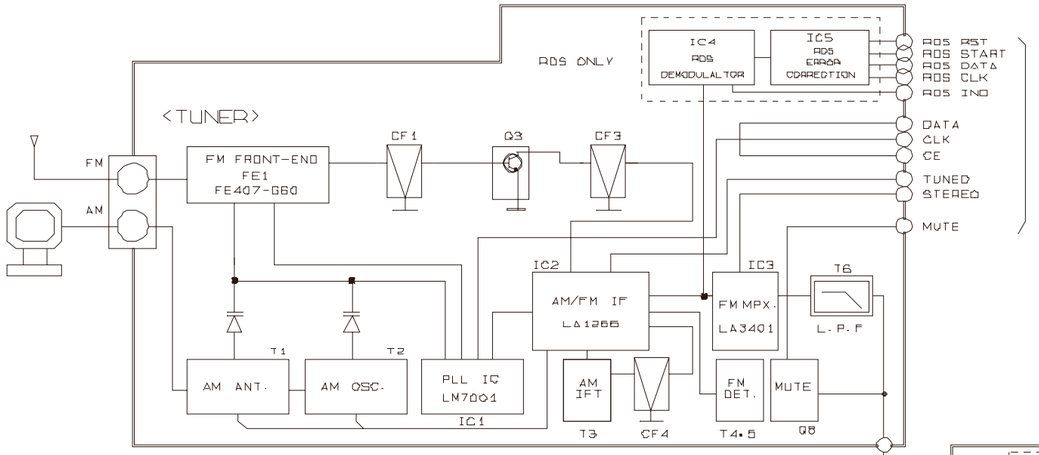

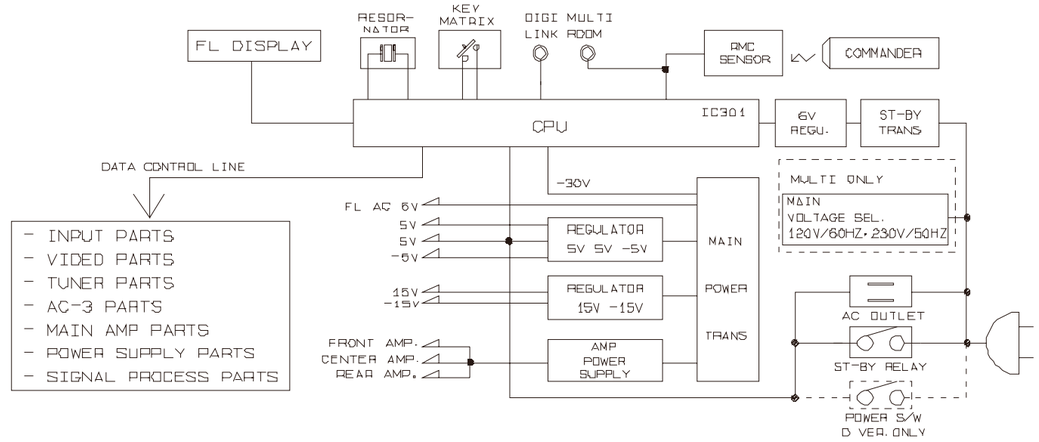

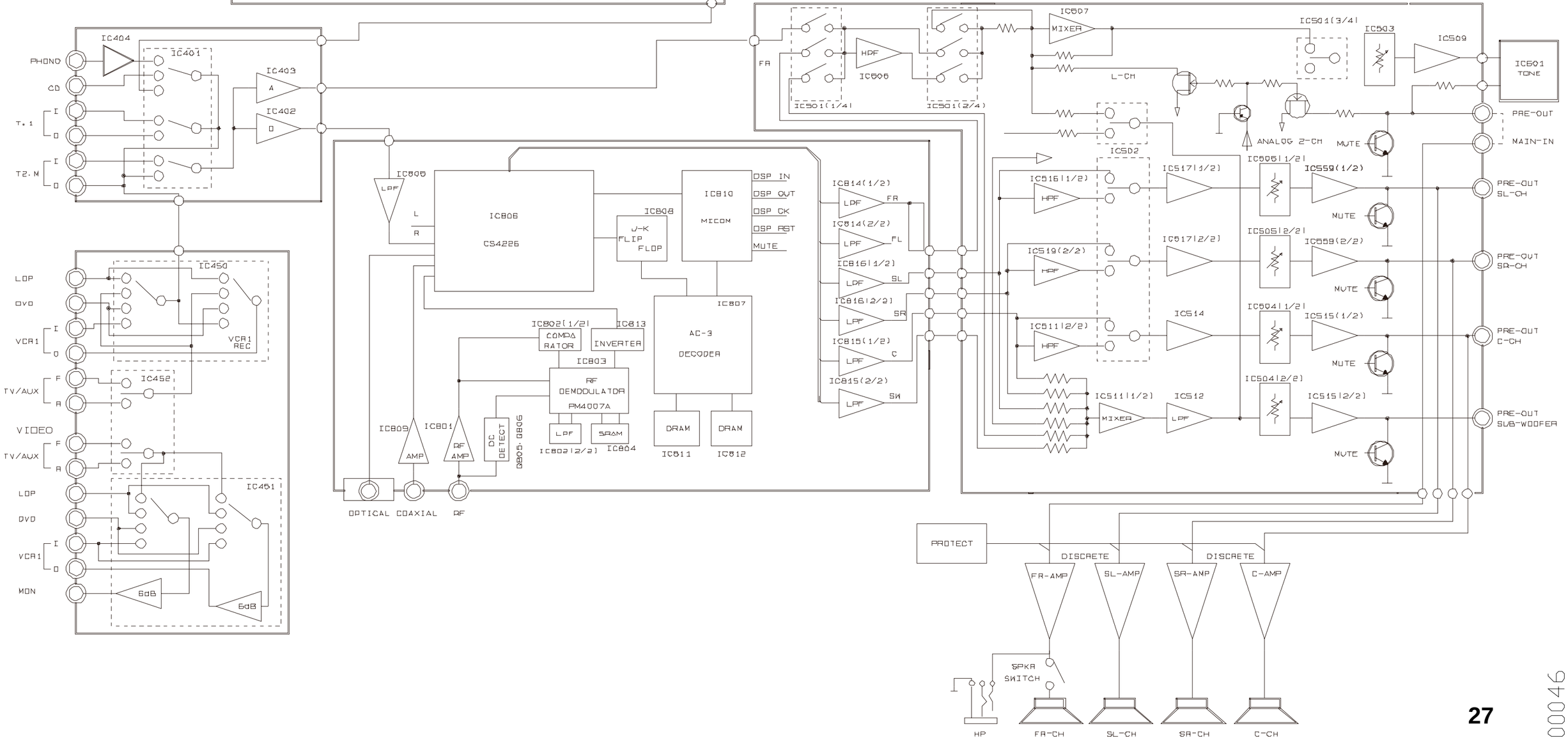

00046

BLOCK D

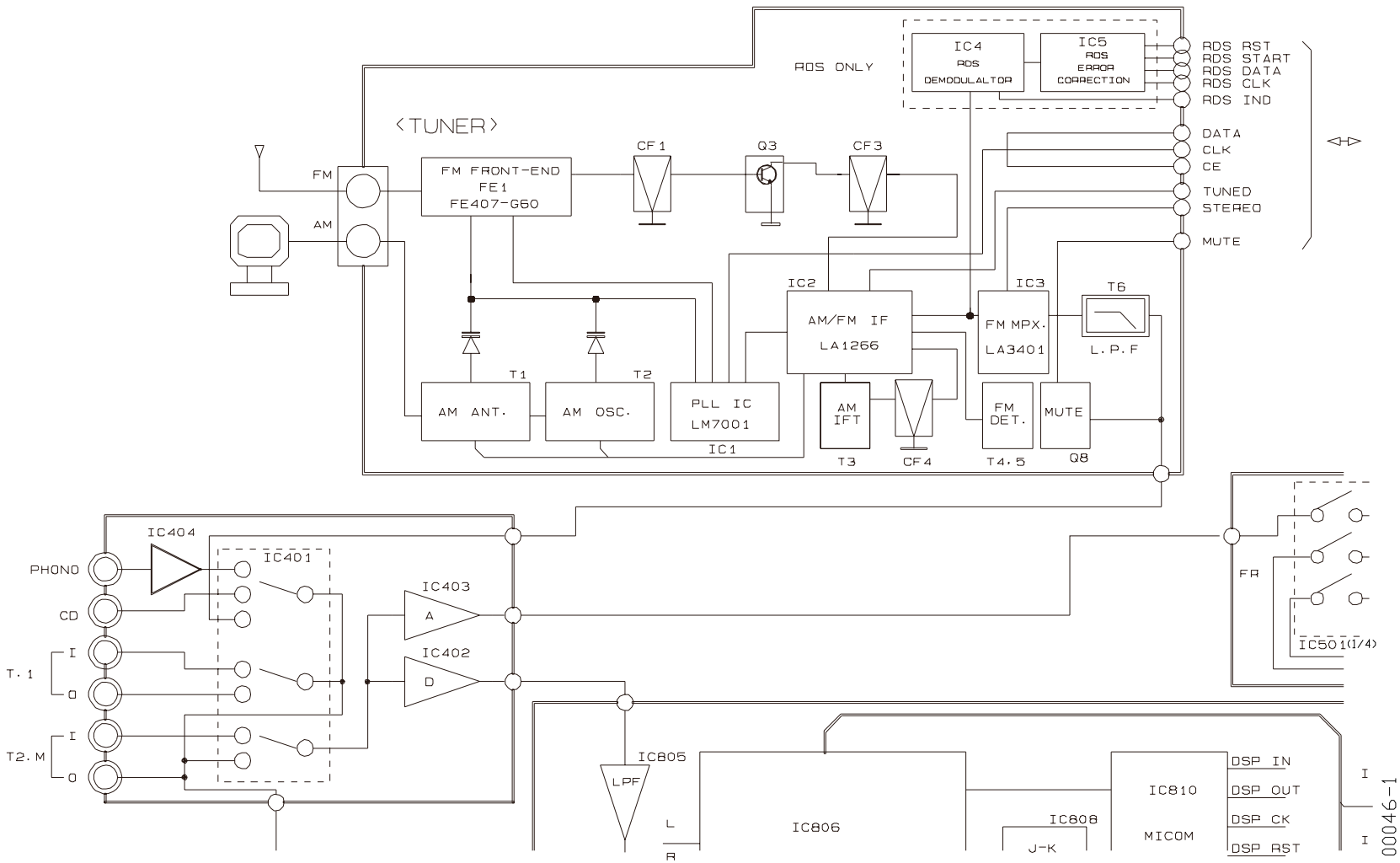
RDS ONLY
IC4
RDS
DEMODULALTOR
IC5
RDS
ERROR
CORRECTION
RDS RST
RDS START
RDS DATA
RDS CLK
RDS IND
<TUNER>
FM
AM
FM FRONT-END
FE1
FE407-G60
CF1
Q3
CF3
DATA
CLK
CE
TUNED
STEREO
MUTE
IC2
AM/FM IF
LA1266
IC3
FM MPX.
LA3401
T6
L.P.F
T1
T2
AM ANT.
AM OSC.
PLL IC
LM7001
IC1
AM
IFT
T3
CF4
FM
DET.
T4.5
MUTE
Q8
IC404
IC401
PHONO
CD
T.1
I
O
T2.M
IC403
A
IC402
D
FA
IC501(1/4)
IC805
LPF
L
R
IC806
IC808
J-K
IC810
MICOM
DSP IN
DSP OUT
DSP CK
DSP RST
I
I
00046-1

K DIAGRAM

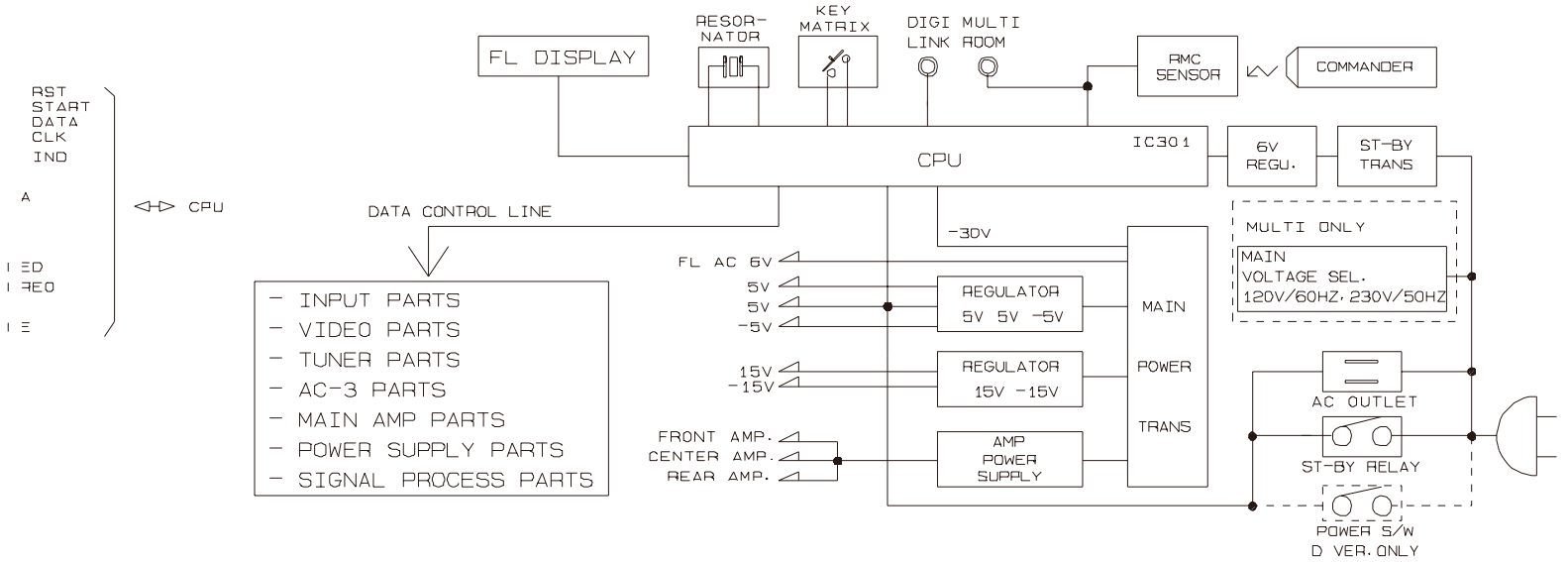

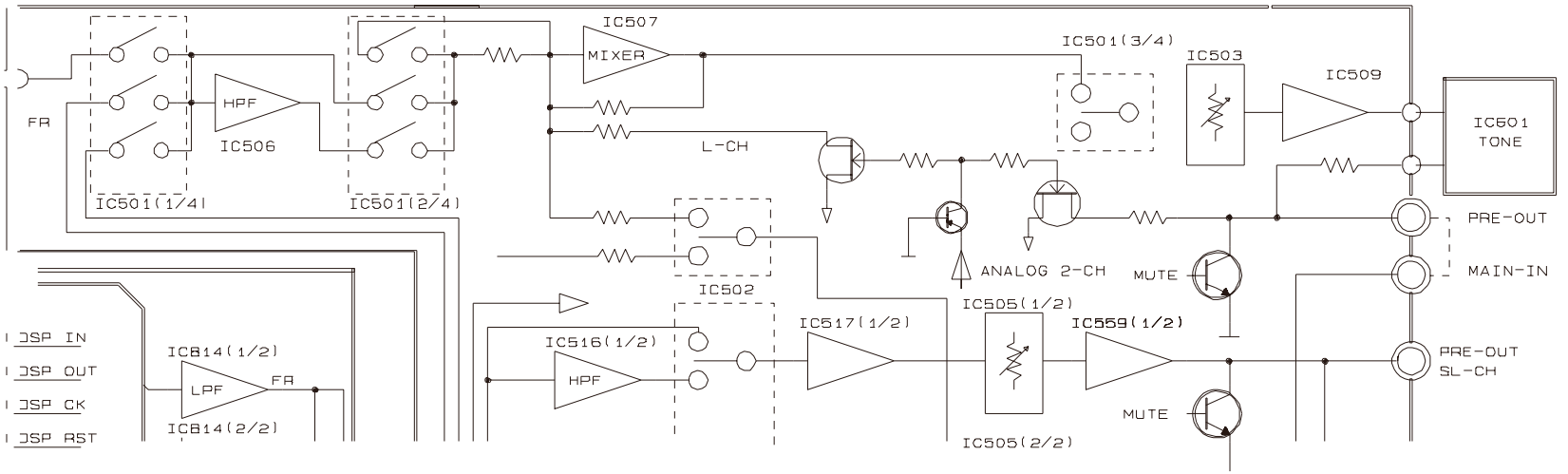

00046-2

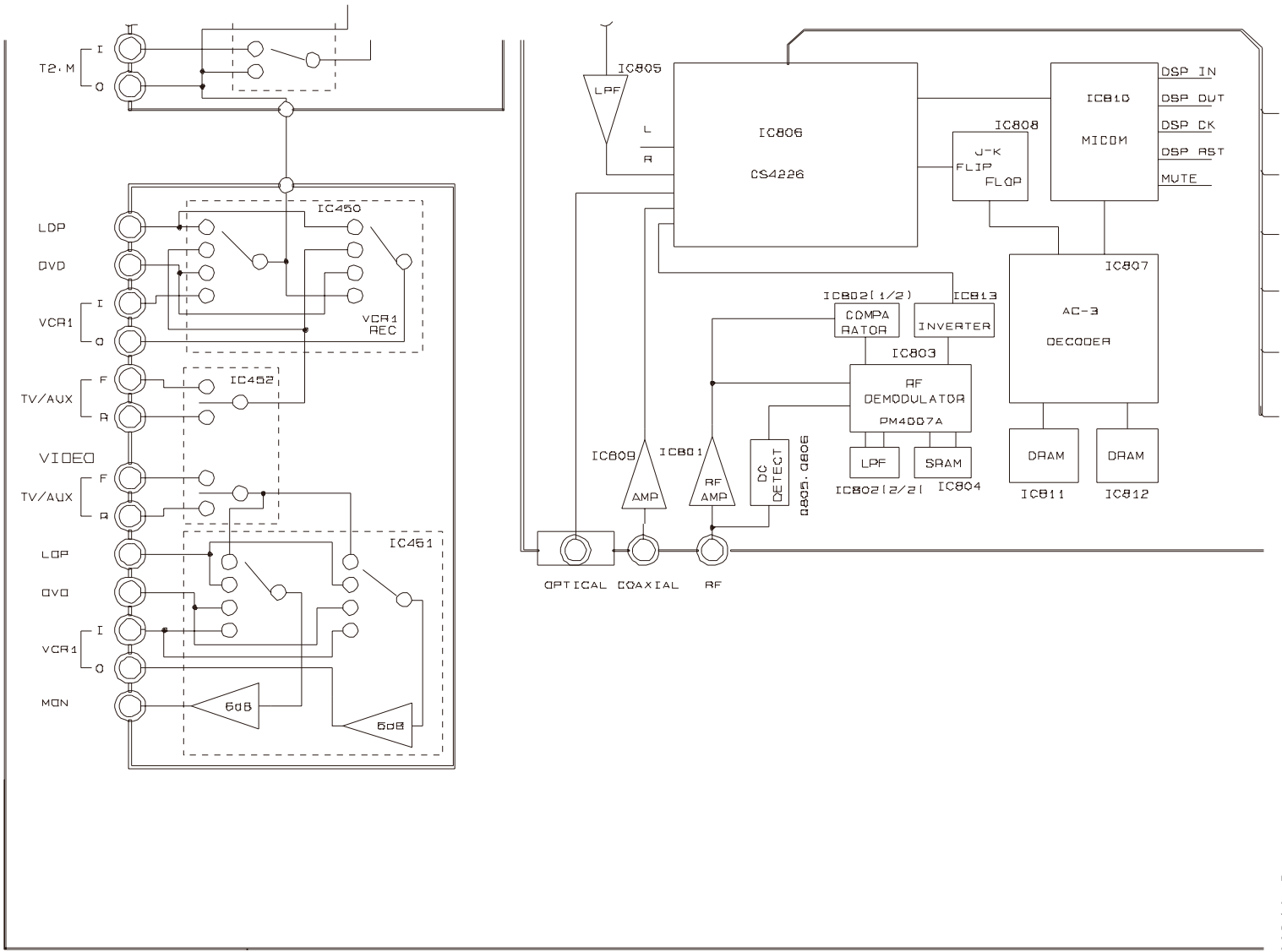
T2.M
I
O
IC450
LDP
DVD
VCR1
I
O
VCR1
REC
IC452
TV/AUX
F
R
VIDEO
TV/AUX
F
R
IC451
LDP
DVD
VCR1
I
O
MON
6dB
6dB
IC805
LPF
L
R
IC806
CS4226
IC808
J-K
FLIP
FLOP
IC810
MICOM
DSP IN
DSP OUT
DSP CK
DSP RST
MUTE
IC807
AC-3
DECODER
IC802(1/2)
COMPA
RATOR
IC813
INVERTER
IC803
RF
DEMODULATOR
PM4007A
IC809
AMP
IC801
RF
AMP
DC
DETECT
LPF
SRAM
IC802(2/2)
IC804
DRAM
DRAM
IC811
IC812
OPTICAL
COAXIAL
RF

00046-3

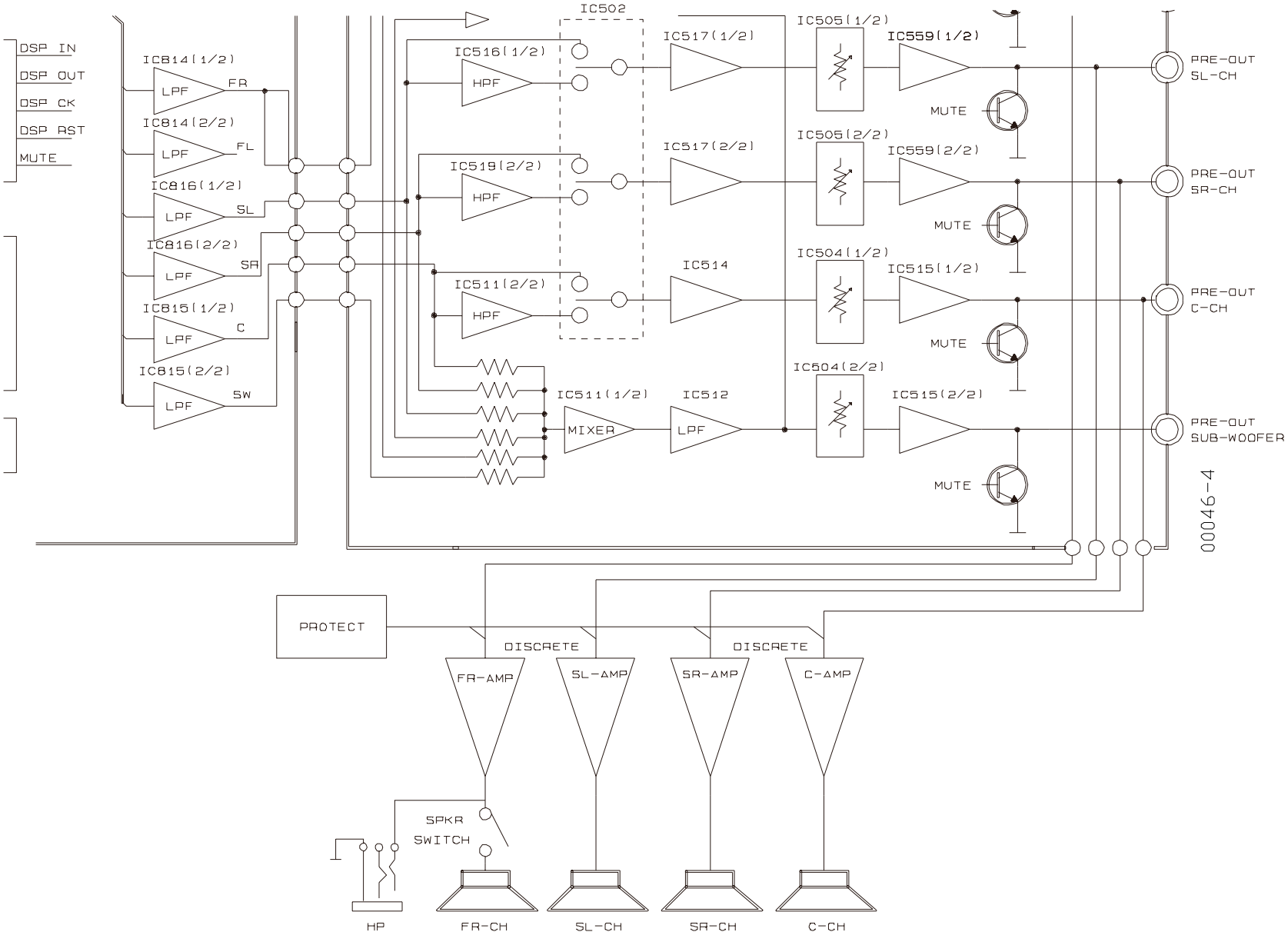
DSP IN
DSP OUT
DSP CK
DSP RST
MUTE
IC814(1/2)
LPF
FR
IC814(2/2)
LPF
FL
IC816(1/2)
LPF
SL
IC816(2/2)
LPF
SR
IC815(1/2)
LPF
C
IC815(2/2)
LPF
SW
IC502
IC516(1/2)
HPF
IC519(2/2)
HPF
IC511(2/2)
HPF
IC511(1/2)
MIXER
IC512
LPF
IC517(1/2)
IC517(2/2)
IC514
IC505(1/2)
IC505(2/2)
IC504(1/2)
IC504(2/2)
IC559(1/2)
IC559(2/2)
IC515(1/2)
IC515(2/2)
MUTE
MUTE
MUTE
MUTE
PRE-OUT
SL-CH
PRE-OUT
SR-CH
PRE-OUT
C-CH
PRE-OUT
SUB-WOOFER
00046-4
PROTECT
DISCRETE
DISCRETE
FR-AMP
SL-AMP
SR-AMP
C-AMP
SPKR
SWITCH
HP
FR-CH
SL-CH
SR-CH
C-CH

EXPLODED VIEW PART 1

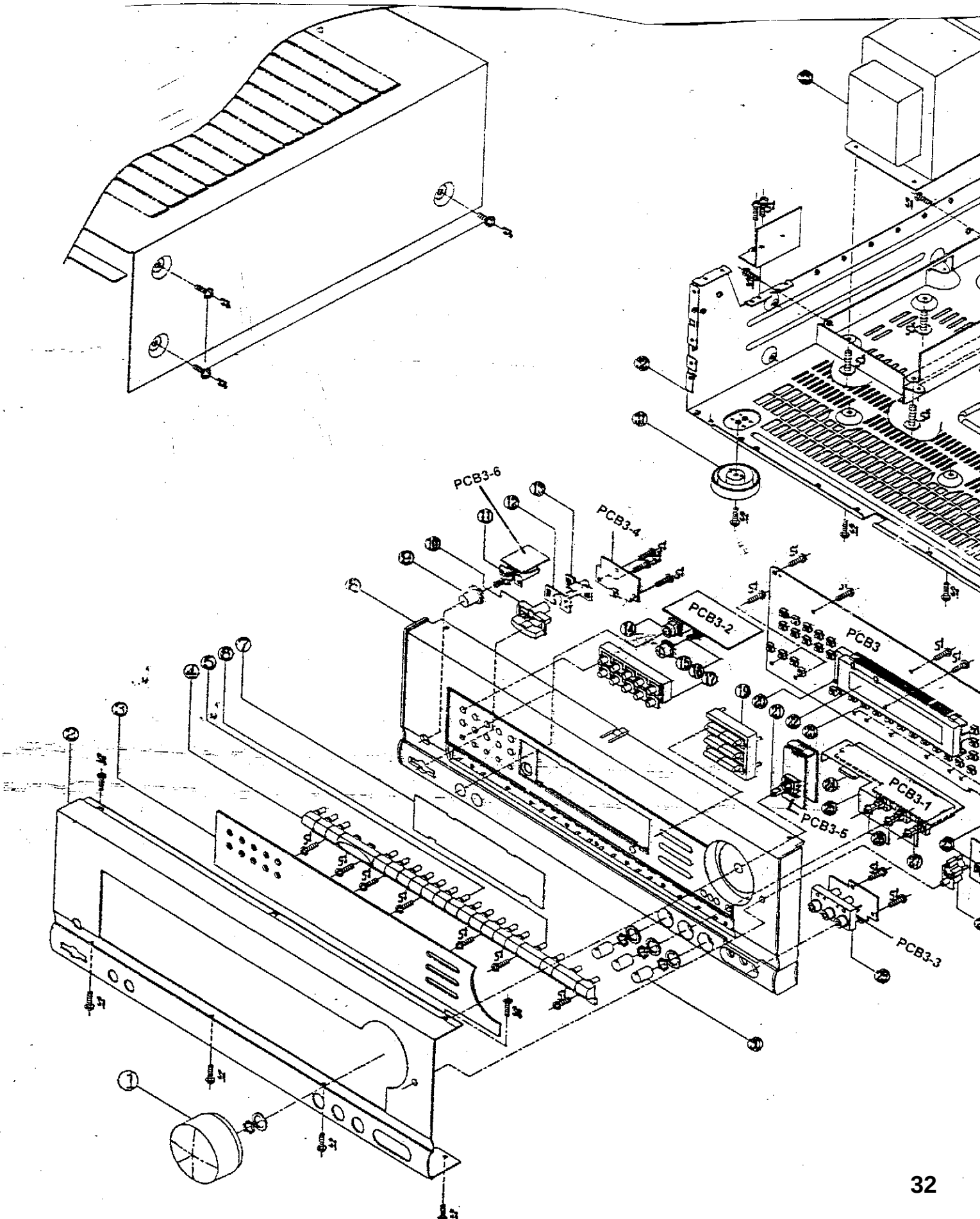

EXPLODED VIEW PART 2

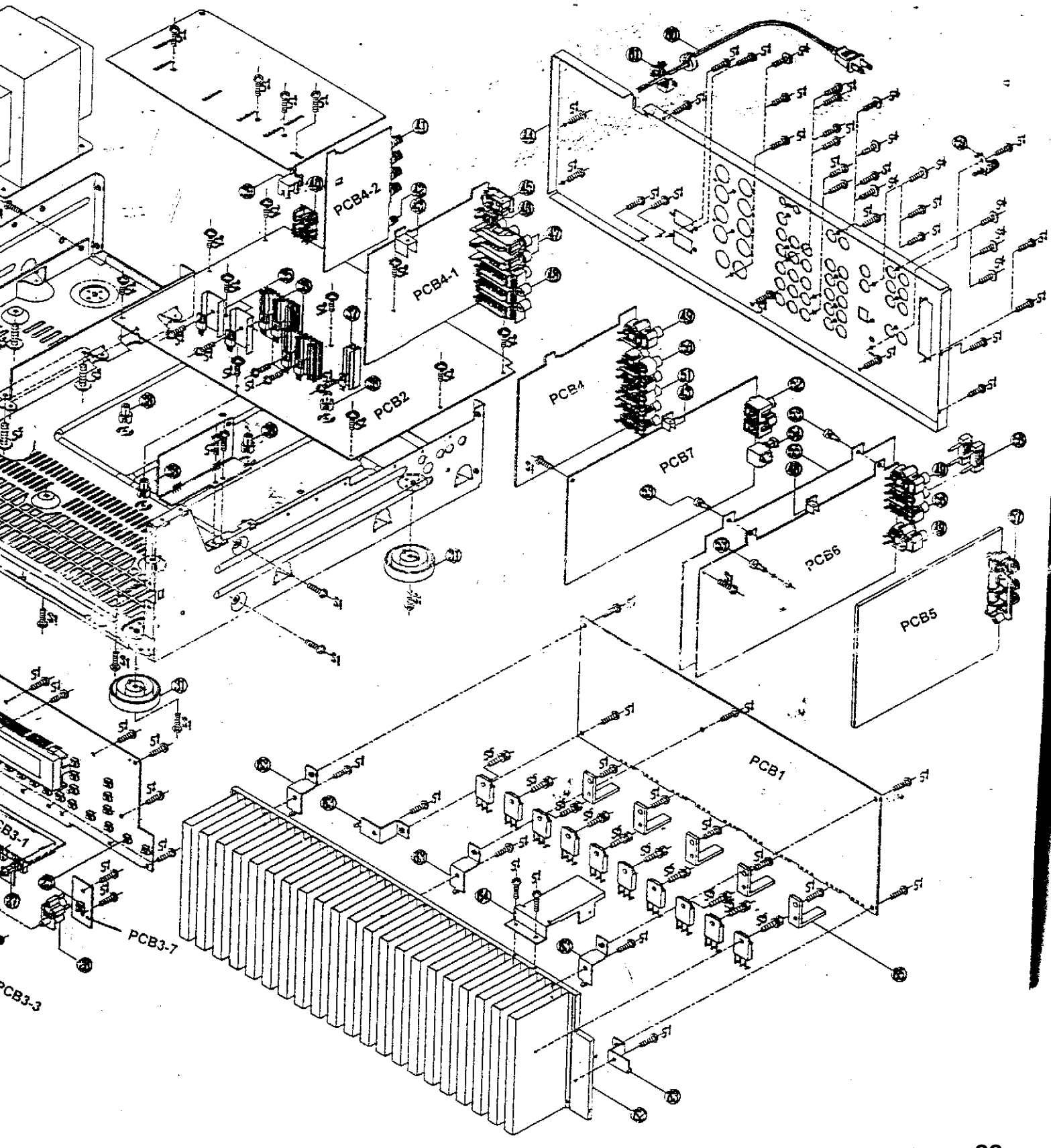

MECHANICAL PARTS LIST

REF NO.	DESCRIPTION	PARTS NO.	Q'TY
	PACKAGE		
	BOX CARTON	6017040990350	1
	CUSHION,SNOW	6230042794010	1
	FILM SOFT PE	6327040302010	1
	POLY BAG	633704122201A	1
	ACCESSORIES		
	AM ANTENNA,LOOP	E601010000000	1
	ANTENNA,WIRE	E605010010000	1
	BATTERY (1.5V)	G670011R50000	1
	INSTRUCTION MANUAL	5707046840020	1
	MATCHING TRANS	L109284007100	1
	RCA CORD (1P)	L063041230000	1
	REMOCON	8300040650010	1
	CABINET & CHASSIS		
1	KNOB MAIN ASS'Y	5088041581010	1
2	PANEL FRONT	3067046448010	1
3	WINDOW	5077045232010	1
4	BTN FUCNTION LEFT	5097091071010	1
5	BTN FUNCTION CENTER	5097091081010	1
6	BTN FUNCTION RIGHT	5097091091010	1
7	FILTER	5200041692010	1
8	BODY FRONT (MOLD)	3417041341010	1
9	BTN POWER	5097054691010	1
10	BTN STANDBY	509704537101A	1
11	SW POWER	G000041610000	1
12	LIGHT SHIELD	4470042662010	1
13	INDICATOR POWER	5160040573010	1
14	JACK PHONE	G402040161330	1
15	BTN SPEAKER	5097053841010	1
16	SW SPEAKER	G000040960000	1
17	BTN PRESET	5097091041010	1
19	BTN TUNING	5097091061010	1
20	HOLDER FL	4320040841010	2
21	SW ENCODER	C49004106001A	1
22	FIP	K530162800010	1
23	SW TACT	G180000210030	39
24	SPONGE	4050043895010	2
25	BKT VOLUME	4010057126011	2
26	VR ROTARY	C454121402810	2
27	VR ROTARY	C452111402200	1
28	BTN CINEMA	5097091101010	1
29	JACK RCA 3P	G606040300000	1
30	KNOB ROTARY	5097054701010	3
31	FOOT P.L (H/S)	4007040201010	4
32	ASS'Y MAIN CHASSIS	3208056416200	1
33	POWER TRANS	8200281015870	1
35	REG TR HEAT SINK	2120044808010	2
36	REG TR HEAT SINK	2120043538020	2
37	REG TR HEAT SINK	2120044358010	1
38	SPACER PCB	4300040561010	4
39	HOLDER PCB	4320044771010	1
40	AC OUTLET	G435040070000	1
41	TERMINAL SPEAKER (8P)	G614081036000	1
42	TERMINAL SPEAKER (2P)	G611040310000	1
43	PLATE GROUND	3070045526010	3
44	CHASSIS BACK	3207056496010	1

REF NO.	DESCRIPTION	PARTS NO.	Q'TY
45	JACK REMOTE	G402042130000	1
46	JACK RCA (1P)	G600100555020	1
47	JACK RCA (3P)	G606300390010	2
48	JACK RCA (9P)	G607901220060	1
49	JACK RCA (2P)	G601200430030	3
50	JACK RCA (4P)	G602400450020	1
51	JACK RCA (6P)	G603600460010	1
52	JACK RCA (2P)	G601200099030	1
53	RIVET SNAP	1560040036010	3
54	MODULE OPTO RCVR	E944102000010	1
55	SHIELD PLATE	3070046716010	1
56	JACK RCA (4P)	G602400450040	1
57	TERMINAL ANT	G590040470000	1
58	JUMP PLUG	L063040750000	2
59	TERMINAL SCREW GND	3790000090000	1
60	ASS'Y CORD AC POWER	L061040050010	1
61	STOPPER CORD	4380040162010	1
62	HEATSINK POWER	2120044988010	1
63	BKT HEATSINK	4010056906010	5
64	BKT PCB	4010056896010	1
65	BKT HEATSINK	4010057166010	5
	HARDWEAR KIT		
S1	SCREW, #BTT 3X8B	B020030083B10	92
S2	SCREW, #BWPTT 3X6Y	B020030061W10	9
S3	SCREW, #WSAM 4X8B	B020940083W10	7
S4	SCREW, GROUND	1507040996010	8
S5	SCREW, HEAT SINK	1507041146010	10
S6	SCREW, #2FTC 3X8B	B010530083F10	2
	MISCELLANEOUS		
	TOP CABINET	3000045406010	1
	CLAMP WIRE	4330040213010	1
	CABLE TIE	4330040343010	1
	BACK CHASSIS	3207056496010	1

ELECTRICAL PARTS LIST

REF NO.	DESCRIPTION					PARTS NO.	'TY
PCB 1	**ASSEMBLY P.C. BOARD AMP**					**7027040955500**	
	CAPACITORS						
C201C	ELECT GE 85C	47 uF	16V	M		D040470083100	1
C201L	ELECT GE 85C	47 uF	16V	M		D040470083100	1
C201R	ELECT GE 85C	47 uF	16V	M		D040470083100	1
C201SL	ELECT GE 85C	47 uF	16V	M		D040470083100	1
C201SR	ELECT GE 85C	47 uF	16V	M		D040470083100	1
C202C	CERAMIC HIK AXIAL	330 pF	50V	B		D005331077530	1
C202L	CERAMIC HIK AXIAL	330 pF	50V	B		D005331077530	1
C202R	CERAMIC HIK AXIAL	330 pF	50V	B		D005331077530	1
C202SL	CERAMIC HIK AXIAL	330 pF	50V	B		D005331077530	1
C202SR	CERAMIC HIK AXIAL	330 pF	50V	B		D005331077530	1
C203C	CERAMIC HIK AXIAL	470 pF	50V	K		D005471077530	1
C203L	CERAMIC HIK AXIAL	470 pF	50V	K		D005471077530	1
C203R	CERAMIC HIK AXIAL	470 pF	50V	K		D005471077530	1
C203SL	CERAMIC HIK AXIAL	470 pF	50V	K		D005471077530	1
C203SR	CERAMIC HIK AXIAL	470 pF	50V	K		D005471077530	1
C204C	ELECT GE 85C	1 uF	50V	M		D040010087050	1
C204L	ELECT GE 85C	1 uF	50V	M		D040010087050	1
C204R	ELECT GE 85C	1 uF	50V	M		D040010087050	1
C204SL	ELECT GE 85C	1 uF	50V	M		D040010087050	1
C204SR	ELECT GE 85C	1 uF	50V	M		D040010087050	1
C205C	ELECT GE 85C	22 uF	16V	M		D040220083100	1
C205L	ELECT GE 85C	22 uF	16V	M		D040220083100	1
C205R	ELECT GE 85C	22 uF	16V	M		D040220083100	1
C205SL	ELECT GE 85C	22 uF	16V	M		D040220083100	1
C205SR	ELECT GE 85C	22 uF	16V	M		D040220083100	1
C206C	ELECT GE 85C	220 uF	10V	M		D040221082100	1
C206L	ELECT GE 85C	220 uF	10V	M		D040221082100	1
C206R	ELECT GE 85C	220 uF	10V	M		D040221082100	1
C206SL	ELECT GE 85C	220 uF	10V	M		D040221082100	1
C206SR	ELECT GE 85C	220 uF	10V	M		D040221082100	1
C209C	ELECT GE 85C	10 uF	50V	M		D040100087050	1
C209L	ELECT GE 85C	10 uF	50V	M		D040100087050	1
C209R	ELECT GE 85C	10 uF	50V	M		D040100087050	1
C209SL	ELECT GE 85C	10 uF	50V	M		D040100087050	1
C209SR	ELECT GE 85C	10 uF	50V	M		D040100087050	1
C210C	ELECT GE 85C	470 uF	63V	M		D040471088020	1
C210L	ELECT GE 85C	470 uF	63V	M		D040471088020	1
C210R	ELECT GE 85C	470 uF	63V	M		D040471088020	1
C210SL	ELECT GE 85C	470 uF	63V	M		D040471088020	1
C210SR	ELECT GE 85C	470 uF	63V	M		D040471088020	1
C211C	ELECT GE 85C	470 uF	63V	M		D040471088020	1
C211L	ELECT GE 85C	470 uF	63V	M		D040471088020	1
C211R	ELECT GE 85C	470 uF	63V	M		D040471088020	1
C211SL	ELECT GE 85C	470 uF	63V	M		D040471088020	1
C211SR	ELECT GE 85C	470 uF	63V	M		D040471088020	1
C212C	ELECT GE 85C	10 uF	50V	M		D040100087050	1
C212L	ELECT GE 85C	10 uF	50V	M		D040100087050	1
C212R	ELECT GE 85C	10 uF	50V	M		D040100087050	1
C212SL	ELECT GE 85C	10 uF	50V	M		D040100087050	1
C212SR	ELECT GE 85C	10 uF	50V	M		D040100087050	1
C214C	CERAMIC T.C AXIAL	1 pF	50V	K		D001010077530	1
C214L	CERAMIC T.C AXIAL	1 pF	50V	K		D001010077530	1
C214R	CERAMIC T.C AXIAL	1 pF	50V	K		D001010077530	1
C214SL	CERAMIC T.C AXIAL	1 pF	50V	K		D001010077530	1
C214SR	CERAMIC T.C AXIAL	1 pF	50V	K		D001010077530	1
C215C	CERAMIC HIK AXIAL	180 pF	50V	B		D005181077530	1
C215L	CERAMIC HIK AXIAL	180 pF	50V	B		D005181077530	1
C215R	CERAMIC HIK AXIAL	180 pF	50V	B		D005181077530	1
C215SL	CERAMIC HIK AXIAL	180 pF	50V	B		D005181077530	1
C215SR	CERAMIC HIK AXIAL	180 pF	50V	B		D005181077530	1
C216L	ELECT GE 85C	10 uF	50V	M		D040100087050	1
C216R	ELECT GE 85C	10 uF	50V	M		D040100087050	1
C218	ELECT GE 85C	47 uF	50V	M		D040470087100	1
	CONNECTOR						
CN201	WIRE, 1007#20 2.5					L021080831810	1
CN202	WIRE, 1007#20 2.5					L021070831810	1
CP201	WAFER 20MM (10P)					L101220100000	1
CP202	WAFER 3.96MM					L104353130200	1
	DIODES						
D201C	1N4148M, SWITCHING					K000414801520	1
D201L	1N4148M, SWITCHING					K000414801520	1
D201R	1N4148M, SWITCHING					K000414801520	1
D201SL	1N4148M, SWITCHING					K000414801520	1
D201SR	1N4148M, SWITCHING					K000414801520	1
D202C	1N4148M, SWITCHING					K000414801520	1
D202L	1N4148M, SWITCHING					K000414801520	1
D202R	1N4148M, SWITCHING					K000414801520	1
D202SL	1N4148M, SWITCHING					K000414801520	1
D202SR	1N4148M, SWITCHING					K000414801520	1
	COILS						
L201C	INDUCTOR COIL 0.5uH					D330900001320	1
L201L	INDUCTOR COIL 0.5uH					D330900001320	1
L201R	INDUCTOR COIL 0.5uH					D330900001320	1

REF NO.	DESCRIPTION	PARTS NO.	'TY
	TRANSISTORS		
Q201C	KTA1268BL, PNP	J5001268B0050	1
Q201L	KTA1268BL, PNP	J5001268B0050	1
Q201R	KTA1268BL, PNP	J5001268B0050	1
Q201SL	KTA1268BL, PNP	J5001268B0050	1
Q201SR	KTA1268BL, PNP	J5001268B0050	1
Q202C	KTA1268BL, PNP	J5001268B0050	1
Q202L	KTA1268BL, PNP	J5001268B0050	1
Q202R	KTA1268BL, PNP	J5001268B0050	1
Q202SL	KTA1268BL, PNP	J5001268B0050	1
Q202SR	KTA1268BL, PNP	J5001268B0050	1
Q203C	KTA1268BL, PNP	J5001268B0050	1
Q203L	KTA1268BL, PNP	J5001268B0050	1
Q203R	KTA1268BL, PNP	J5001268B0050	1
Q203SL	KTA1268BL, PNP	J5001268B0050	1
Q203SR	KTA1268BL, PNP	J5001268B0050	1
Q204C	KTA1268BL, PNP	J5001268B0050	1
Q204L	KTA1268BL, PNP	J5001268B0050	1
Q204R	KTA1268BL, PNP	J5001268B0050	1
Q204SL	KTA1268BL, PNP	J5001268B0050	1
Q204SR	KTA1268BL, PNP	J5001268B0050	1
Q205C	KTC2240BL(BKTC3200), NPN	J5023200B0050	1
Q205L	KTC2240BL(BKTC3200), NPN	J5023200B0050	1
Q205R	KTC2240BL(BKTC3200), NPN	J5023200B0050	1
Q205SL	KTC2240BL(BKTC3200), NPN	J5023200B0050	1
Q205SR	KTC2240BL(BKTC3200), NPN	J5023200B0050	1
Q206C	KTC2240BL(BKTC3200), NPN	J5023200B0050	1
Q206L	KTC2240BL(BKTC3200), NPN	J5023200B0050	1
Q206R	KTC2240BL(BKTC3200), NPN	J5023200B0050	1
Q206SL	KTC2240BL(BKTC3200), NPN	J5023200B0050	1
Q206SR	KTC2240BL(BKTC3200), NPN	J5023200B0050	1
Q207C	KTA1268BL, PNP	J5001268B0050	1
Q207L	KTA1268BL, PNP	J5001268B0050	1
Q207R	KTA1268BL, PNP	J5001268B0050	1
Q207SL	KTA1268BL, PNP	J5001268B0050	1
Q207SR	KTA1268BL, PNP	J5001268B0050	1
Q208C	2SA1360, PNP	J5001360O000	1
Q208L	2SA1360, PNP	J5001360O000	1
Q208R	2SA1360, PNP	J5001360O000	1
Q208SL	2SA1360, PNP	J5001360O000	1
Q208SR	2SA1360, PNP	J5001360O000	1
Q209C	2SC3423, NPN	J5023423O0000	1
Q209L	2SC3423, NPN	J5023423O0000	1
Q209R	2SC3423, NPN	J5023423O0000	1
Q209SL	2SC3423, NPN	J5023423O0000	1
Q209SR	2SC3423, NPN	J5023423O0000	1
Q210C	2SC1740S, NPN	J5021740S0010	1
Q210L	2SC1740S, NPN	J5021740S0010	1
Q210R	2SC1740S, NPN	J5021740S0010	1
Q210SL	2SC1740S, NPN	J5021740S0010	1
Q210SR	2SC1740S, NPN	J5021740S0010	1
Q211C	2SC4883A, NPN	J5024883Y0000	1
Q211L	2SC4883A, NPN	J5024883Y0000	1
Q211R	2SC4883A, NPN	J5024883Y0000	1
Q211SL	2SC4883A, NPN	J5024883Y0000	1
Q211SR	2SC4883A, NPN	J5024883Y0000	1
Q212C	TR 2SA 1859A-Y	J5001859Y0000	1
Q212L	TR 2SA 1859A-Y	J5001859Y0000	1
Q212R	TR 2SA 1859A-Y	J5001859Y0000	1
Q212SL	TR 2SA 1859A-Y	J5001859Y0000	1
Q212SR	TR 2SA 1859A-Y	J5001859Y0000	1
Q213C	2SC5200, NPN	J502520000010	1
Q213L	2SC5200, NPN	J502520000010	1
Q213R	2SC5200, NPN	J502520000010	1
Q213SL	2SC5200, NPN	J502520000010	1
Q213SR	2SC5200, NPN	J502520000010	1
Q214C	2SA1943, PNP	J500194300010	1
Q214L	2SA1943, PNP	J500194300010	1
Q214R	2SA1943, PNP	J500194300010	1
Q214SL	2SA1943, PNP	J500194300010	1
Q214SR	2SA1943, PNP	J500194300010	1
Q215C	KTC2240BL(BKTC3200), NPN	J5023200B0050	1
Q215L	KTC2240BL(BKTC3200), NPN	J5023200B0050	1
Q215R	KTC2240BL(BKTC3200), NPN	J5023200B0050	1
Q215SL	KTC2240BL(BKTC3200), NPN	J5023200B0050	1
Q215SR	KTC2240BL(BKTC3200), NPN	J5023200B0050	1
	RESISTORS		
R201C	METAL FILM 1 kohm 1/5W J	C06001026P52	1
R201L	METAL FILM 1 kohm 1/5W J	C06001026P52	1
R201R	METAL FILM 1 kohm 1/5W J	C06001026P52	1
R201SL	METAL FILM 1 kohm 1/5W J	C06001026P52	1
R201SR	METAL FILM 1 kohm 1/5W J	C06001026P52	1
R202C	CHIP THICK 33 kohm 1/10 J	C200033360200	1
R202L	CHIP THICK 33 kohm 1/10 J	C200033360200	1
R202R	CHIP THICK 33 kohm 1/10 J	C200033360200	1
R202SL	CHIP THICK 33 kohm 1/10 J	C200033360200	1
R202SR	CHIP THICK 33 kohm 1/10 J	C200033360200	1

REF NO.	DESCRIPTION				PARTS NO.	Q'TY
R203C	CHIP THICK	15 ohm	1/8W	J	C200015061320	1
R203L	CHIP THICK	15 ohm	1/8W	J	C200015061320	1
R203R	CHIP THICK	15 ohm	1/8W	J	C200015061320	1
R203SL	CHIP THICK	15 ohm	1/8W	J	C200015061320	1
R203SR	CHIP THICK	15 ohm	1/8W	J	C200015061320	1
R204C	CHIP THICK	15 ohm	1/8W	J	C200015061320	1
R204L	CHIP THICK	15 ohm	1/8W	J	C200015061320	1
R204R	CHIP THICK	15 ohm	1/8W	J	C200015061320	1
R204SL	CHIP THICK	15 ohm	1/8W	J	C200015061320	1
R204SR	CHIP THICK	15 ohm	1/8W	J	C200015061320	1
R205C	METAL FILM	750 ohm	1/5W	J	C06007516P520	1
R205L	METAL FILM	750 ohm	1/5W	J	C06007516P520	1
R205R	METAL FILM	750 ohm	1/5W	J	C06007516P520	1
R205SL	METAL FILM	750 ohm	1/5W	J	C06007516P520	1
R205SR	METAL FILM	750 ohm	1/5W	J	C06007516P520	1
R206C	METAL FILM	750 ohm	1/5W	J	C06007516P520	1
R206L	METAL FILM	750 ohm	1/5W	J	C06007516P520	1
R206R	METAL FILM	750 ohm	1/5W	J	C06007516P520	1
R206SL	METAL FILM	750 ohm	1/5W	J	C06007516P520	1
R206SR	METAL FILM	750 ohm	1/5W	J	C06007516P520	1
R207C	METAL FILM	1 kohm	1/5W	J	C06001026P520	1
R207L	METAL FILM	1 kohm	1/5W	J	C06001026P520	1
R207R	METAL FILM	1 kohm	1/5W	J	C06001026P520	1
R207SL	METAL FILM	1 kohm	1/5W	J	C06001026P520	1
R207SR	METAL FILM	1 kohm	1/5W	J	C06001026P520	1
R208C	METAL FILM	68 ohm	1/5W	J	C06006806P520	1
R208L	METAL FILM	68 ohm	1/5W	J	C06006806P520	1
R208R	METAL FILM	68 ohm	1/5W	J	C06006806P520	1
R208SL	METAL FILM	68 ohm	1/5W	J	C06006806P520	1
R208SR	METAL FILM	68 ohm	1/5W	J	C06006806P520	1
R209C	CHIP THICK	150 ohm	1/10W	J	C200015160200	1
R209L	CHIP THICK	150 ohm	1/10W	J	C200015160200	1
R209R	CHIP THICK	150 ohm	1/10W	J	C200015160200	1
R209SL	CHIP THICK	150 ohm	1/10W	J	C200015160200	1
R209SR	CHIP THICK	150 ohm	1/10W	J	C200015160200	1
R210C	CHIP THICK	10 kohm	1/10W	J	C200010360200	1
R210L	CHIP THICK	10 kohm	1/10W	J	C200010360200	1
R210R	CHIP THICK	10 kohm	1/10W	J	C200010360200	1
R210SL	CHIP THICK	10 kohm	1/10W	J	C200010360200	1
R210SR	CHIP THICK	10 kohm	1/10W	J	C200010360200	1
R211C	CARBON FILM	43 kohm	1/5W	J	C00004336P520	1
R211L	CARBON FILM	43 kohm	1/5W	J	C00004336P520	1
R211R	CARBON FILM	43 kohm	1/5W	J	C00004336P520	1
R211SL	CARBON FILM	43 kohm	1/5W	J	C00004336P520	1
R211SR	CARBON FILM	43 kohm	1/5W	J	C00004336P520	1
R212C	METAL FILM	1.5 kohm	1/5W	J	C06001526P520	1
R212L	METAL FILM	1.5 kohm	1/5W	J	C06001526P520	1
R212R	METAL FILM	1.5 kohm	1/5W	J	C06001526P520	1
R212SL	METAL FILM	1.5 kohm	1/5W	J	C06001526P520	1
R212SR	METAL FILM	1.5 kohm	1/5W	J	C06001526P520	1
R213C	CHIP THICK	33 kohm	1/10W	J	C200033360200	1
R213L	CHIP THICK	33 kohm	1/10W	J	C200033360200	1
R213R	CHIP THICK	33 kohm	1/10W	J	C200033360200	1
R213SL	CHIP THICK	33 kohm	1/10W	J	C200033360200	1
R213SR	CHIP THICK	33 kohm	1/10W	J	C200033360200	1
R214C	METAL FILM	560 ohm	1/5W	J	C06005616P520	1
R214L	METAL FILM	560 ohm	1/5W	J	C06005616P520	1
R214R	METAL FILM	560 ohm	1/5W	J	C06005616P520	1
R214SL	METAL FILM	560 ohm	1/5W	J	C06005616P520	1
R214SR	METAL FILM	560 ohm	1/5W	J	C06005616P520	1
R215C	CHIP THICK	0 ohm	1/10W	J	C200000060200	1
R215L	CHIP THICK	0 ohm	1/10W	J	C200000060200	1
R215R	CHIP THICK	0 ohm	1/10W	J	C200000060200	1
R215SL	CHIP THICK	0 ohm	1/10W	J	C200000060200	1
R215SR	CHIP THICK	0 ohm	1/10W	J	C200000060200	1
R216C	METAL FILM	560 ohm	1/5W	J	C06005616P520	1
R216L	METAL FILM	560 ohm	1/5W	J	C06005616P520	1
R216R	METAL FILM	560 ohm	1/5W	J	C06005616P520	1
R216SL	METAL FILM	560 ohm	1/5W	J	C06005616P520	1
R216SR	METAL FILM	560 ohm	1/5W	J	C06005616P520	1
R217C	METAL FILM	560 ohm	1/5W	J	C06005616P520	1
R217L	METAL FILM	560 ohm	1/5W	J	C06005616P520	1
R217R	METAL FILM	560 ohm	1/5W	J	C06005616P520	1
R217SL	METAL FILM	560 ohm	1/5W	J	C06005616P520	1
R217SR	METAL FILM	560 ohm	1/5W	J	C06005616P520	1
R218C	METAL FILM	560 ohm	1/5W	J	C06005616P520	1
R218L	METAL FILM	560 ohm	1/5W	J	C06005616P520	1
R218R	METAL FILM	560 ohm	1/5W	J	C06005616P520	1
R218SL	METAL FILM	560 ohm	1/5W	J	C06005616P520	1
R218SR	METAL FILM	560 ohm	1/5W	J	C06005616P520	1
R219C	METAL FILM	560 ohm	1/5W	J	C06005616P520	1
R219L	METAL FILM	560 ohm	1/5W	J	C06005616P520	1
R219R	METAL FILM	560 ohm	1/5W	J	C06005616P520	1
R219SL	METAL FILM	560 ohm	1/5W	J	C06005616P520	1
R219SR	METAL FILM	560 ohm	1/5W	J	C06005616P520	1
R220C	METAL FILM	560 ohm	1/5W	J	C06005616P520	1
R220L	METAL FILM	560 ohm	1/5W	J	C06005616P520	1
R220R	METAL FILM	560 ohm	1/5W	J	C06005616P520	1
R220SL	METAL FILM	560 ohm	1/5W	J	C06005616P520	1
R220SR	METAL FILM	560 ohm	1/5W	J	C06005616P520	1
R221C	METAL FILM	82 ohm	1/5W	J	C06008206P520	1
R221L	METAL FILM	82 ohm	1/5W	J	C06008206P520	1
R221R	METAL FILM	82 ohm	1/5W	J	C06008206P520	1
R221SL	METAL FILM	82 ohm	1/5W	J	C06008206P520	1
R221SR	METAL FILM	82 ohm	1/5W	J	C06008206P520	1
R222C	METAL FILM	82 ohm	1/5W	J	C06008206P520	1
R222L	METAL FILM	82 ohm	1/5W	J	C06008206P520	1
R222R	METAL FILM	82 ohm	1/5W	J	C06008206P520	1
R222SL	METAL FILM	82 ohm	1/5W	J	C06008206P520	1
R222SR	METAL FILM	82 ohm	1/5W	J	C06008206P520	1
R223C	CHIP THICK	22 kohm	1/10W	J	C200022360200	1
R223L	CHIP THICK	22 kohm	1/10W	J	C200022360200	1
R223R	CHIP THICK	22 kohm	1/10W	J	C200022360200	1
R223SL	CHIP THICK	22 kohm	1/10W	J	C200022360200	1
R223SR	CHIP THICK	22 kohm	1/10W	J	C200022360200	1
R224C	CHIP THICK	22 kohm	1/10W	J	C200022360200	1
R224L	CHIP THICK	22 kohm	1/10W	J	C200022360200	1
R224R	CHIP THICK	22 kohm	1/10W	J	C200022360200	1
R224SL	CHIP THICK	22 kohm	1/10W	J	C200022360200	1
R224SR	CHIP THICK	22 kohm	1/10W	J	C200022360200	1
R225C	METAL FILM	2.2 kohm	1/5W	J	C06002226P520	1
R225L	METAL FILM	2.2 kohm	1/5W	J	C06002226P520	1
R225R	METAL FILM	2.2 kohm	1/5W	J	C06002226P520	1
R225SL	METAL FILM	2.2 kohm	1/5W	J	C06002226P520	1
R225SR	METAL FILM	2.2 kohm	1/5W	J	C06002226P520	1
R226C	METAL FILM	560 ohm	1/5W	J	C06005616P520	1
R226L	METAL FILM	560 ohm	1/5W	J	C06005616P520	1
R226R	METAL FILM	560 ohm	1/5W	J	C06005616P520	1
R226SL	METAL FILM	620 ohm	1/5W	J	C06006216P520	1
R226SR	METAL FILM	620 ohm	1/5W	J	C06006216P520	1
R227C	METAL FILM	1.2 kohm	1/5W	J	C06001226P520	1
R227L	METAL FILM	1.2 kohm	1/5W	J	C06001226P520	1
R227R	METAL FILM	1.2 kohm	1/5W	J	C06001226P520	1
R227SL	CARBON FILM	1.3 kohm	1/5W	J	C00001326P520	1
R227SR	CARBON FILM	1.3 kohm	1/5W	J	C00001326P520	1
R228C	METAL FILM	100 ohm	1/5W	J	C06001016P520	1
R228L	METAL FILM	100 ohm	1/5W	J	C06001016P520	1
R228R	METAL FILM	100 ohm	1/5W	J	C06001016P520	1
R228SL	METAL FILM	100 ohm	1/5W	J	C06001016P520	1
R228SR	METAL FILM	100 ohm	1/5W	J	C06001016P520	1
R229C	METAL FILM	100 ohm	1/5W	J	C06001016P520	1
R229L	METAL FILM	100 ohm	1/5W	J	C06001016P520	1
R229R	METAL FILM	100 ohm	1/5W	J	C06001016P520	1
R229SL	METAL FILM	100 ohm	1/5W	J	C06001016P520	1
R229SR	METAL FILM	100 ohm	1/5W	J	C06001016P520	1
R230C	METAL FILM	82 ohm	1/5W	J	C06008206P520	1
R230L	METAL FILM	82 ohm	1/5W	J	C06008206P520	1
R230R	METAL FILM	82 ohm	1/5W	J	C06008206P520	1
R230SL	METAL FILM	82 ohm	1/5W	J	C06008206P520	1
R230SR	METAL FILM	82 ohm	1/5W	J	C06008206P520	1
R231C	METAL FILM	3.3 ohm	1/5W	J	C0603R306P520	1
R231L	METAL FILM	3.3 ohm	1/5W	J	C0603R306P520	1
R231R	METAL FILM	3.3 ohm	1/5W	J	C0603R306P520	1
R231SL	METAL FILM	3.3 ohm	1/5W	J	C0603R306P520	1
R231SR	METAL FILM	3.3 ohm	1/5W	J	C0603R306P520	1
R232C	METAL FILM	3.3 ohm	1/5W	J	C0603R306P520	1
R232L	METAL FILM	3.3 ohm	1/5W	J	C0603R306P520	1
R232R	METAL FILM	3.3 ohm	1/5W	J	C0603R306P520	1
R232SL	METAL FILM	3.3 ohm	1/5W	J	C0603R306P520	1
R232SR	METAL FILM	3.3 ohm	1/5W	J	C0603R306P520	1
R233C	METAL FILM	1.8 kohm	1/5W	J	C06001826P520	1
R233L	METAL FILM	1.8 kohm	1/5W	J	C06001826P520	1
R233R	METAL FILM	1.8 kohm	1/5W	J	C06001826P520	1
R233SL	METAL FILM	1.8 kohm	1/5W	J	C06001826P520	1
R233SR	METAL FILM	1.8 kohm	1/5W	J	C06001826P520	1
R234C	METAL FILM	2 kohm	1/5W	J	C06002026P520	1
R234L	METAL FILM	2 kohm	1/5W	J	C06002026P520	1
R234R	METAL FILM	2 kohm	1/5W	J	C06002026P520	1
R234SL	METAL FILM	2 kohm	1/5W	J	C06002026P520	1
R234SR	METAL FILM	2 kohm	1/5W	J	C06002026P520	1
R235C	METAL FILM	910 ohm	1/5W	J	C06009116P520	1
R235L	METAL FILM	910 ohm	1/5W	J	C06009116P520	1
R235R	METAL FILM	910 ohm	1/5W	J	C06009116P520	1
R235SL	METAL FILM	910 ohm	1/5W	J	C06009116P520	1
R235SR	METAL FILM	910 ohm	1/5W	J	C06009116P520	1
R236C	CARBON FILM	6.8 kohm	1/5W	J	C00006826P520	1
R236L	CARBON FILM	6.8 kohm	1/5W	J	C00006826P520	1
R236R	CARBON FILM	6.8 kohm	1/5W	J	C00006826P520	1
R236SL	CARBON FILM	6.8 kohm	1/5W	J	C00006826P520	1
R236SR	CARBON FILM	6.8 kohm	1/5W	J	C00006826P520	1
R237C	METAL FILM	39 ohm	1/5W	J	C06003906P520	1
R237L	METAL FILM	39 ohm	1/5W	J	C06003906P520	1
R237R	METAL FILM	39 ohm	1/5W	J	C06003906P520	1
R238C	METAL FILM	39 ohm	1/5W	J	C06003906P520	1
R238L	METAL FILM	39 ohm	1/5W	J	C06003906P520	1
R238R	METAL FILM	39 ohm	1/5W	J	C06003906P520	1

REF NO.	DESCRIPTION					PARTS NO.	Q'TY
R239C	METAL FILM	39 ohm	1/5W	J		C06003906P520	1
R239L	METAL FILM	39 ohm	1/5W	J		C06003906P520	1
R239R	METAL FILM	39 ohm	1/5W	J		C06003906P520	1
R240C	METAL FILM	39 ohm	1/5W	J		C06003906P520	1
R240L	METAL FILM	39 ohm	1/5W	J		C06003906P520	1
R240R	METAL FILM	39 ohm	1/5W	J		C06003906P520	1
R243	METAL FILM	560 ohm	1/5W	J		C06005616P520	1
R245L	CHIP THICK	22 kohm	1/10W	J		C200022360200	1
R245R	CHIP THICK	22 kohm	1/10W	J		C200022360200	1
R246	METAL FILM	560 ohm	1/5W	J		C06005616P520	1
MRP201C	CEMENT MPR DUAL	0.27 ohm	5W	5%		C144R27069300	1
MRP201L	CEMENT MPR DUAL	0.27 ohm	5W	5%		C144R27069300	1
MRP201R	CEMENT MPR DUAL	0.27 ohm	5W	5%		C144R27069300	1
MRP201SL	CEMENT MPR DUAL	0.27 ohm	5W	5%		C144R27069300	1
MRP201SR	CEMENT MPR DUAL	0.27 ohm	5W	5%		C144R27069300	1
	THERMISTORS						
TH201C	THERMISTOR, NTC5D-302KPC					F340530200000	1
TH201L	THERMISTOR, NTC5D-302KPC					F340530200000	1
TH201R	THERMISTOR, NTC5D-302KPC					F340530200000	1
TH201SL	THERMISTOR, NTC5D-302KPC					F340530200000	1
TH201SR	THERMISTOR, NTC5D-302KPC					F340530200000	1
PCB 2	**ASSEMBLY P.C. BOARD MAIN**					**7028040955200**	
	CAPACITORS						
C101	CERAMIC AC (SAFETY)					D00847208K03D	1
C102-C104	FILM POLYESTER	0.047 uF	100V	J		D02047306C060	3
C107	ELECT GE 85C	330 uF	25V	M		D040331084100	1
C108	CERAMIC HIK DISC	0.1 uF	50V	Z		D004104097060	1
C109	ELECT GE 85C	1 uF	50V	M		D040010087050	1
C110	ELECT GE 85C	100 uF	35V	M		D040101085100	1
C111/C112	ELECT GE 85C	15000 uF	63V	M		D040153088300	2
C113	ELECT GE 85C	1 uF	50V	M		D040010087050	1
C115	FILM POLYESTER	0.1 uF	250V	K		D02010407H080	1
C116	FILM POLYESTER	0.1 uF	63V	K		D020104078060	1
C117/C118	FILM POLYESTER	0.1 uF	250V	K		D02010407H080	2
C119	ELECT GE 85C	1 uF	50V	M		D040010087050	1
C122-C124	FILM POLYESTER	0.1 uF	250V	K		D02010407H080	2
C127-C129	FILM POLYESTER	0.047 uF	100V	J		D02047306C060	3
C130/C131	ELECT GE 85C	2200 uF	35V	M		D040222085200	2
C132	ELECT GE 85C	1 uF	50V	M		D040010087050	1
C133	CERAMIC HIK DISC	0.1 uF	50V	Z		D004104097060	1
C134	ELECT GE 85C	1 uF	50V	M		D040010087050	1
C135	CERAMIC HIK DISC	0.1 uF	50V	Z		D004104097060	1
C136-C138	FILM POLYESTER	0.047 uF	100V	J		D02047306C060	3
C139	ELECT GE 85C	10000 uF	16V	M		D040103083020	1
C140	ELECT GE 85C	2200 uF	16V	M		D040222083020	1
C141	ELECT GE 85C	1 uF	50V	M		D040010087050	1
C142	CERAMIC HIK DISC	0.1 uF	50V	Z		D004104097060	1
C143	ELECT GE 85C	1 uF	50V	M		D040010087050	1
C144	CERAMIC HIK DISC	0.1 uF	50V	Z		D004104097060	1
C145	ELECT GE 85C	1 uF	50V	M		D040010087050	1
C146	CERAMIC HIK DISC	0.1 uF	50V	Z		D004104097060	1
C151	ELECT GE 85C	1 uF	50V	M		D040010087050	1
C152	ELECT GE 85C	470 uF	6.3V	T		D040471081100	1
	CONNECTORS						
CN151	Wafer, 7.92mm 2P					L104353280200	1
CP100	WAFER 2.5MM					L102532911910	1
CP101	WAFER 3.96MM					L104353280400	1
CP102	WAFER 2.5MM (6P)					L102526706010	1
CP103	WAFER 2.5MM					L102526704010	1
CP111	WAFER 7.92MM (2P)					L108B2P300010	1
CP141	WAFER 2.5MM					L102526702010	1
CP201	WAFER 2.5MM (8P)					L102526708010	1
CP202	WAFER 2.5MM (7P)					L102526707010	1
CP301	FPC 1.25MM					L131520453100	1
CP302	WAFER 2.0MM (7P)					L101220070000	1
CP401	WAFER 2.0MM (11P)					L101353361110	1
CP402	WAFER 2.0MM (8P)					L101353360810	1
CP451	WAFER 2.0MM (16P)					L101353361610	1
CP501	WAFER 2.0MM (19P)					L101353361910	1
CP502	WAFER 2.0MM (15P)					L101353361510	1
CP751D	WAFER 3.96MM					L104353260200	1
CP801	WAFER 2.0MM (11P)					L101353361110	1
CP802	WAFER 2.0MM (14P)					L101353361410	1
CP901	WAFER 2.5MM (11P)					L102534211110	1
	DIODES						
D101-D106	1N4003, RECTIFIER					K040400300520	7
D107	ZENER 4.3V					K06004R314520	1
D108/D109	1N4148M, SWITCHING					K000414801520	2
D110/D111	ZENER 9.1V					K06009R124520	2
D112	ZENER 12V					K060120024520	1
D113	ZENER 7.5V					K06007R524520	1
D114	1N4148M, SWITCHING					K000414801520	1
D116/D117	D5SBA60, RECTIFIER BRIDGE					K047056000010	2
D119-D128	1N4003, RECTIFIER					K040400300520	10

REF NO.	DESCRIPTION	PARTS NO.	Q'TY
D121-D128	1N4003, RECTIFIER	K040400300520	8
D129	ZENER 9.1V	K06009R124520	1
D130	1N4148M, SWITCHING	K000414801520	1
	FUSES		
F101	FUSE, SB 8A 250V	G650802251010	1
F103	FUSE, SB 315MA 125V	G650311121150	1
F104/F105	FUSE, SB 1A 125V	G650102121150	2
F106/F107	FUSE, SB 1.5A 125V	G650152121150	2
	INTEGRATED CIRCUITS		
IC101	KIA7815, REGULATER	J126781500020	1
IC102	KIA7915, REGULATER	J126791500030	1
IC103/IC104	KIA7805, REGULATER	J126780500270	2
IC105	KIA7905, REGULATER	J126790500070	1
IC107	KIA7806, REGULATER	J126780600120	1
	TRANSISORS		
Q101	DTC114YS, NPN	J602011400050	1
Q140	DTA114YS, PNP	J6000114Y0010	1
Q141	KTA1267Y, PNP	J5001267Y0050	1
Q142/Q143	2SC1740S, NPN	J502174Y0050	2
Q164	2SC3199Y (BKTC3199), NPN	J5023199Y0050	1
Q165	DTA114YS, PNP	J6000114Y0010	1
	RESISTORS		
R101	METAL FILM 3.3 Mohm 1/2W J	C060033574530	1
R102	METAL FILM 470 ohm 1/5W J	C06004716P520	1
R103	CHIP THICK 10 kohm 1/10W J	C200010360200	1
R104	CARBON FILM 1 Mohm 1/5W J	C00001056P520	1
R105	CARBON FILM 100 kohm 1/5W J	C00001046P520	1
R106	METAL FILM 10 ohm 1W J	C060010066520	1
R107	CARBON FILM 15 kohm 1/5W J	C00001536P520	1
R108	METAL FILM 330 ohm 1W J	C060033165520	1
R109	CARBON FILM 1 Mohm 1/5W J	C00001056P520	1
R110	CHIP THICK 100 kohm 1/10W J	C200010460200	1
R111/R112	METAL FILM 10 ohm 1W J	C060010066520	2
R113-R115	METAL FILM 1 ohm 2W J	C060001066520	3
R117	METAL FILM 1 kohm 1/5W J	C06001026P520	1
R118/R119	METAL FILM 470 ohm 1/5W J	C06004716P520	2
R120	METAL FILM 470 ohm 1/5W J	C06004716P520	1
R142 SL	CARBON FILM 24 kohm 1/5W J	C00002436P520	1
R142 SR	CARBON FILM 24 kohm 1/5W J	C00002436P520	1
R143	CARBON FILM 24 kohm 1/5W J	C00002436P520	1
R144	METAL FILM 4.7 kohm 1/5W J	C06004726P520	1
R145	CARBON FILM 100 kohm 1/5W J	C00001046P520	1
R146	CARBON FILM 68 kohm 1/5W J	C00006836P520	1
R147	METAL FILM 3.3 kohm 1/5W J	C06003326P520	1
R148	METAL FILM 1.5 kohm 1/5W J	C06001526P520	1
R149	METAL FILM 1 kohm 1/5W J	C06001026P520	1
	MISCELLANEOUS		
RLY101	RELAY, HR-CR7 DC12V	G680125020010	1
TRANS101	ST-BY, 120V/60Hz	8200280960010	1
TRANS	POWER TRANS,120V/60Hz	8200281015870	1
PCB 3	**ASSEMBLY P.C. BOARD FRONT**	**7028040955600**	
	CAPACITORS		
C301-C310	CERAMIC T.C AXIAL 100 pF 50V J	D001101077530	10
C311/C312	FILM POLYESTER 0.047 uF 100V J	D02047306C060	2
C313	ELECT GE 85C 0.1 uF 50V M	D040R10087050	1
C316/C317	ELECT GE 85C 47 uF 25V M	D040470084100	2
C318	ELECT GE 85C 10 uF 50V M	D040100087050	1
C319	ELECT GE 85C 47 uF 50V M	D040470087100	1
C321	CERAMIC T.C AXIAL 100 pF 50V J	D001101077530	1
C322	BACK UP. CAP 0.047 uF 5.5V F	D090473700200	1
C331	CERAMIC T.C AXIAL 100 pF 50V J	D001101077530	1
	CONNECTORS		
CN301	FPC 1.25MM	L131525753100	1
CN302	WIRE, 1007#26 2.0	L022074034320	1
CN303	WIRE 2.5MM	L003121052600	1
CN304	WAFER 2.0MM (5P)	L101220050010	1
CN305	WAFER 2.5MM (2P)	L102526802010	1
CN306	WIRE, 2P	L024021432310	1
CN603	WIRE, 1007#26 2.0	L022045234320	1
	DIODES		
D301-D310	1N4148M, SWITCHING	K000414801520	10
D312	1N4148M, SWITCHING	K000414801520	1
D314	1N4148M, SWITCHING	K000414801520	1
D316-D319	LED SLR-34URCF25	K500032101120	4
D320-D323	1N4148M, SWITCHING	K000414801520	4
D331	1N4148M, SWITCHING	K000414801520	1
D651	LED SLR-34URCF25	K500032101120	1
	INTEGRATED CIRCUITS		
IC301	CXP82852-124Q (DWP475A) ,CPU	J020828521280	

REF NO.	DESCRIPTION				PARTS NO.	Q'TY
IC302	REMOTE SENSO				E940134200000	1
	TRANSISTORS					
Q302-Q304	DTC114YS, NPN				J6020114Y0050	3
Q305-Q308	2SC3199Y(BKTC3199Y), NPN				J5023199Y0050	4
Q309	MPSA05(MPSA06), NPN				J5020600Y0050	1
Q311	DTC114YS, NPN				J6020114Y0050	1
Q651	DTC114YS, NPN				J6020114Y0050	1
	RESISTORS					
R301-R310	METAL FILM	1 kohm	1/5W	J	C06001026P520	10
R311-R320	CARBON FILM	100 kohm	1/5W	J	C00001046P520	10
R321-R324	CARBON FILM	47 kohm	1/5W	J	C00004736P520	4
R325	CARBON FILM	39 kohm	1/5W	J	C00003936P520	1
R328	CARBON FILM	10 kohm	1/5W	J	C00001036P520	1
R329	METAL FILM	4.7 kohm	1/5W	J	C06004726P520	1
R331	CARBON FILM	47 kohm	1/5W	J	C00004736P520	1
R332RV	CARBON FILM	10 kohm	1/5W	J	C00001036P520	1
R333A	CARBON FILM	10 kohm	1/5W	J	C00001036P520	1
R334/R335	CARBON FILM	68 kohm	1/5W	J	C00006836P520	2
R336	CARBON FILM	10 kohm	1/5W	J	C00001036P520	1
R337/R338	METAL FILM	470 ohm	2W	J	C060047166520	2
R340	CARBON FILM	10 kohm	1/5W	J	C00001036P520	1
R341/R342	METAL FILM	1 kohm	1/5W	J	C06001026P520	2
R343/R344	CARBON FILM	22 kohm	1/5W	J	C00002236P520	2
R349	METAL FILM	470 ohm	2W	J	C060047166520	1
R350	CARBON FILM	100 kohm	1/5W	J	C00001046P520	1
R351/R352	CARBON FILM	6.8 ohm	1/5W	J	C0006R806P520	2
R355	CARBON FILM	10 kohm	1/5W	J	C00001036P520	1
R356	METAL FILM	100 ohm	1/5W	J	C06001016P520	1
R357-R360	CARBON FILM	100 kohm	1/5W	J	C00001046P520	4
R361	CARBON FILM	22 kohm	1/5W	J	C00002236P520	1
R365-R368	METAL FILM	2.2 kohm	1/5W	J	C06002226P520	4
R371	CARBON FILM	10 kohm	1/5W	J	C00001036P520	1
R372NORDS	CARBON FILM	10 kohm	1/5W	J	C00001036P520	1
R373RDS	CARBON FILM	100 kohm	1/5W	J	C00001046P520	1
R374	METAL FILM	2.2 kohm	1/5W	J	C06002226P520	1
R375	CARBON FILM	47 kohm	1/5W	J	C00004736P520	1
R377	CARBON FILM	100 kohm	1/10W	J	C00001046P520	1
R378	CARBON FILM	39 kohm	1/5W	J	C00003936P520	1
R380	CARBON FILM	5.6 kohm	1/5W	J	C00005626P520	1
R381	METAL FILM	470 ohm	2W	J	C060047166520	1
R384	METAL FILM	100 ohm	1/5W	J	C06001016P520	1
R391	METAL FILM	1 kohm	1/5W	J	C06001026P520	1
R392	CARBON FILM	100 kohm	1/5W	J	C00001046P520	1
R393	CARBON FILM	10 kohm	1/5W	J	C00001036P520	1
R394	CARBON FILM	100 kohm	1/5W	J	C00001046P520	1
R396	CARBON FILM	2.2 Mohm	1/5W	J	C00002256P520	1
R399	CARBON FILM	5.6 kohm	1/5W	J	C00005626P520	1
R401	CARBON FILM	5.6 kohm	1/5W	J	C00005626P520	1
R651	METAL FILM	820 ohm	1/5W	J	C06008216P520	1
	MISCELLANEOUS					
J305	BEAD CORD 3580				7610010030000	1
FIP	DISPLAY,FLT				K530162800020	1
FL HOLDER	HOLDER FL				4320040841010	1
SW301-342	SW,TACT				G180000210030	1
X300	RESONATOR, CST10.0MTW-TF01				E830100000050	1
PCB 3-1	**ASSEMBLY P.C. BOARD TONE & CBASS**					
	CAPACITORS					
C601 L/R	ELECT GE 85C	4.7 uF	50V	M	D0404R7087100	2
C602 L/R	CERAMIC T.C AXIAL	47 pF	50V	J	D001470067530	2
C603 L/R	ELECT GE 85C	10 uF	16V	M	D040100083110	2
C604 L/R	ELECT GE 85C	10 uF	16V	M	D040100083110	2
C605 L/R	FILM POLYESTER	0.082 uF	63V	J	D020823068050	2
C606 L/R	FILM POLYESTER	0.015 uF	63V	J	D020153068050	2
C607 L/R	FILM POLYESTER	0.022 uF	63V	J	D020223068050	2
C608 L/R	FILM POLYESTER	0.003 uF	63V	J	D020332068050	2
C609 L/R	FILM POLYESTER	0.33 uF	63V	J	D020334068050	2
C610 L/R	FILM POLYESTER	0.008 uF	63V	J	D020822068050	2
C611 L/R	ELECT GE 85C	10 uF	16V	M	D040100083110	2
C612	ELECT GE 85C	3.3 uF	50V	M	D0403R3087100	1
C613/C614	ELECT GE 85C	47 uF	25V	M	D040470084100	2
	CONNECTORS					
CN602	WAFER 2.0MM (9P)				L101220090000	1
CP305	WIRE, 2877#36 2.5				L021021433310	1
	INTEGRATED CIRCUITS					
IC601	NJM2068DD, LINEAR OP				J121206800000	1
	TRANSISTORS					
Q601	DTC114YS, NPN				J6020114Y0050	1
Q602	DTA114YS, PNP				J601114YS0050	1
Q603 L/R	2SK117Y, FET				J5441170Y0050	2

REF NO.	DESCRIPTION				PARTS NO.	Q'TY
	RESISTORS					
R601 L/R	CARBON FILM	100 kohm	1/5W	J	C00001046P520	2
R602 L/R	CARBON FILM	1 Mohm	1/5W	J	C00001056P520	2
R603 L/R	CARBON FILM	47 kohm	1/5W	J	C00004736P520	2
R604 L/R	METAL FILM	2.7 kohm	1/5W	J	C06002726P520	2
R605L/R	CARBON FILM	10 Mohm	1/5W	J	C00001066P520	2
R606 L/R	METAL FILM	4.7 kohm	1/5W	J	C06004726P520	2
R607 L/R	CARBON FILM	27 kohm	1/5W	J	C00002736P520	2
R608 L/R	METAL FILM	3.3 kohm	1/5W	J	C06003326P520	2
R609 L/R	CARBON FILM	22 kohm	1/5W	J	C00002236P520	2
R610 L/R	METAL FILM	560 ohm	1/5W	J	C06005616P520	2
R611 L/R	METAL FILM	2.2 kohm	1/5W	J	C06002226P520	2
R612 L/R	METAL FILM	1.8 kohm	1/5W	J	C06001826P520	2
R613 L/R	CARBON FILM	100 kohm	1/5W	J	C00001046P520	2
R614	CARBON FILM	100 kohm	1/5W	J	C00001046P520	1
R615	CARBON FILM	1 Mohm	1/5W	J	C00001056P520	1
R616/R617	METAL FILM	220 ohm	1/5W	J	C06002216P520	2
R618 L/R	CARBON FILM	1 Mohm	1/5W	J	C00001056P520	2
	MISCELLANEOUS					
VR601/VR602	VR, ROTARY 14MM-100K				C454121402810	2
VR603	VR, ROTARY 11MM-100K				C452111402200	1
W601	WIRE LUG #24BK200 (1P)				L046241020580	1
PCB 3-2	**ASSEMBLY P.C. BOARD HP/SPK SW**					
	CAPACITORS					
C701 L/R	CERAMIC HIK AXIAL	560 pF	50V	B	D005561077530	1
	RESISTORS					
R701 L/R	METAL FILM	470 ohm	1/5W	J	C06004716P520	2
R702 L/R	CARBON FILM	15 kohm	1/5W	J	C00001536P520	2
R703 L/R	CARBON FILM	22 kohm	1/5W	J	C00002236P520	2
	MISCELLANEOUS					
CN701	WIRE, CTJ 0657 210, 1007#18 3.96				L018065042660	1
H/P JACK	HTJ064-11D(G)				G402040161330	1
H/P BKT	BRACKET, SW JACK				4010056196010	1
SW701	PUSH SW				G000040960000	1
W701	WIRE LUG #24BK200 (1P)				L046241020580	1
PCB 3-3	**ASSEMBLY P.C. BOARD VIDEO FRONT**					
	CAPACITORS					
C651 L/R	CERAMIC T.C AXIAL	100 pF	50V	J	D001101077530	1
C654/C655	CERAMIC HIK AXIAL	0.1 uF	50V	Z	D005104097530	1
C656	ELECT GE 85C	33 uF	16V	M	D040330083120	1
	RESISTORS					
R652 L/R	METAL FILM	470 ohm	1/5W	J	C06004716P520	1
R653	METAL FILM	75 ohm	1/5W	J	C06007506P520	1
	MISCELLANEOUS					
VIDEO JACK	RCA 3PIN				G606040300000	1
CN601	WAFER 2.0MM				L101220050010	1
W651	WIRE LUG #24BK200 (1P)				L046241020580	1
PCB 3-4	**ASSEMBLY P.C. BOARD POWER SW TACT**					
C314	ELECT GE 85C	10 uF	16V	M	D040100083120	1
CP304	WIRE, 2651#26 2.0				L352105123300	1
D321	LED SPR 54MDW3				K500055106050	1
Q321	DTC114YS, NPN				J6020114Y0050	1
Q322	DTC114YS, NPN				J6020114Y0050	1
R326/R327	METAL FILM	270 ohm	1/5W	J	C06002716P520	2
SW751ABK	TACT SW				G180000210030	1
PCB 3-5	**ASSEMBLY P.C. BOARD VOL. ENC**					
C351/C352	CERAMIC HIK AXIAL	820 pF	50V	K	D005821077530	2
CP303	WIRE 2.5MM				L003121052600	1
VR351	ENCODER ROTARY VR				C49004106001A	1
PCB 3-6	**ASSEMBLY P.C. BOARD SW PUSH**					
CN751D	WIRE, CTM 0250 35191, 1617#22 7.92				L001501022200	1
SW752D	PUSH SW				G000041610000	1
PCB 3-7	**ASSEMBLY P.C. BOARD CBASS SW**					
CP306	WIRE, 2P				L024021432310	1
SW343	TACT SW				G180000210030	1
PCB 4	**ASSEMBLY P.C. BOARD INPUT**				**7028040955800**	
	CAPACITORS					
C401LD-C410LD	CERAMIC T.C AXIAL	100 pF	50V	J	D001101077530	10
C401RD-C410RD	CERAMIC T.C AXIAL	100 pF	50V	J	D001101077530	10
C411	ELECT GE 85C	47 uF	25V	M	D040470084100	1
C412	ELECT GE 85C	1 uF	50V	M	D040010087050	1
C414	ELECT GE 85C	47 uF	25V	M	D040470084100	1
C417	CERAMIC T.C AXIAL	100 pF	50V	J	D001101077530	1
C418-C421	ELECT GE 85C	47 uF	25V	M	D040470084100	4

REF NO.	DESCRIPTION					PARTS NO.	Q'TY
C422L/R	ELECT GE 85C	4.7 uF	50V	M		D0404R7087100	2
C423L/R	ELECT GE 85C	4.7 uF	50V	M		D0404R7087100	2
C424L/R	ELECT GE 85C	4.7 uF	50V	M		D0404R7087100	2
C425L/R	ELECT GE 85C	4.7 uF	50V	M		D0404R7087100	2
C426LD	CERAMIC T.C AXIAL	100 pF	50V	J		D001101077530	1
C426RD	CERAMIC T.C AXIAL	100 pF	50V	J		D001101077530	1
C427L/R	CERAMIC T.C AXIAL	100 pF	50V	J		D001101077530	2
C428L/R	ELECT GE 85C	4.7 uF	50V	M		D0404R7087100	2
C429LD	CERAMIC HIK AXIAL	0.0022 uF	16V	J		D005222773530	1
C429RD	CERAMIC HIK AXIAL	2200 pF	16V	K		D005222773530	1
C430L/R	ELECT GE 85C	33 uF	25V	M		D040330084100	2
C431L/R	FILM POLYESTER	0.002 uF	100V	J		D02018206C060	2
C432L/R	FILM POLYESTER	0.006 uF	100V	J		D02056206C060	2
C433L/R	ELECT GE 85C	1 uF	50V	J		D040010087050	2
C434L/R	FILM POLYESTER	0.002 uF	100V	J		D02018206C060	2
C435/C436	ELECT GE 85C	47 uF	25V	M		D040470084100	2
C437	CERAMIC HIK AXIAL	10000 pF	16V	Y		D005103773530	1
C473	ELECT GE 85C	47 uF	25V	M		D040470084100	1
	CONNECTORS						
CN401	WAFER 2.0MM (11P)					L101352371110	1
CN402	WAFER 2.0MM (8P)					L101352370810	1
	DIODE						
D401	1N4148M, SWITCHING					K000414801520	1
	INTEGRATED CIRCUITS						
IC401	LC7821, LOGIC					J040782100010	1
IC402~IC404	KIA4559, LINEAR OP					J121455900010	3
	COILS						
L401LD	COIL, FILTER INDUCTOR 47uH					D330470001020	1
L401RD	COIL, FILTER INDUCTOR 47uH					D330470001020	1
	RESISTORS						
R401L/R	METAL FILM	470 ohm	1/5W	J		C06004716P520	2
R402L/R	METAL FILM	470 ohm	1/5W	J		C06004716P520	2
R403L/R	METAL FILM	470 ohm	1/5W	J		C06004716P520	2
R404L/R	METAL FILM	470 ohm	1/5W	J		C06004716P520	2
R405L/R	METAL FILM	1 kohm	1/5W	J		C06001026P520	2
R406	METAL FILM	220 ohm	1/5W	J		C06002216P520	1
R407	CHIP THICK	100 kohm	1/10W	J		C200010460200	1
R408-R412	METAL FILM	220 ohm	1/5W	J		C06002216P520	5
R413-R415	METAL FILM	1 kohm	1/5W	J		C06001026P520	3
R416L/R	CHIP THICK	100 kohm	1/10W	J		C200010460200	2
R417L/R	CHIP THICK	100 kohm	1/10W	J		C200010460200	2
R418L/R	CHIP THICK	100 kohm	1/10W	J		C200010460200	2
R419L/R	CHIP THICK	100 kohm	1/10W	J		C200010460200	2
R420L/R	METAL FILM	1 kohm	1/5W	J		C06001026P520	2
R421L/R	CARBON FILM	91 kohm	1/5W	J		C00009136P520	2
R422L/R	CARBON FILM	91 kohm	1/5W	J		C00009136P520	2
R423L/R	METAL FILM	820 ohm	1/5W	J		C06008216P520	2
R424L/R	CARBON FILM	43 kohm	1/5W	J		C00004336P520	2
R425L/R	CARBON FILM	560 kohm	1/5W	J		C00005646P520	2
R426L/R	METAL FILM	560 ohm	1/5W	J		C06005616P520	2
R427L/R	CHIP THICK	100 kohm	1/10W	J		C200010460200	2
R428/R429	METAL FILM	220 ohm	1/5W	J		C06002216P520	2
R430L/R	METAL FILM	1 kohm	1/5W	J		C06001026P520	2
R431L/R	METAL FILM	1 kohm	1/5W	J		C06001026P520	2
R433L/R	METAL FILM	470 ohm	1/5W	J		C06004716P520	2
R434L/R	METAL FILM	470 ohm	1/5W	J		C06004716P520	2
R435L/R	CHIP THICK	47 kohm	1/10W	J		C200047360200	2
PCB 4-1	**ASSEMBLY P.C. BOARD INPUT & VIDEO**						
	CAPACITORS						
C452LD/RD	CERAMIC T.C AXIAL	100 pF	50V	J		D001101077530	2
C454LD/RD	CERAMIC T.C AXIAL	100 pF	50V	J		D001101077530	2
C456LD/RD	CERAMIC T.C AXIAL	100 pF	50V	J		D001101077530	2
C458LD/RD	CERAMIC T.C AXIAL	100 pF	50V	J		D001101077530	2
C460	ELECT GE 85C	47 uF	25V	M		D040470084100	1
C461	ELECT GE 85C	10 uF	50V	M		D040100087050	1
C463	ELECT GE 85C	47 uF	25V	M		D040470084100	1
C466/C467	ELECT GE 85C	100 pF	50V	J		D001101077530	2
C468	CERAMIC HIK AXIAL	0.1 uF	50V	Z		D005104097530	1
C469/C470	CERAMIC T.C AXIAL	100 pF	50V	J		D001101077530	2
C471	ELECT GE 85C	47 uF	25V	M		D040470084100	1
C472	ELECT GE 85C	10 uF	50V	M		D040100087050	1
C473	ELECT GE 85C	47 uF	25V	M		D040470084100	1
C474/C475	ELECT GE 85C	10 uF	50V	M		D040100087050	2
C478	CERAMIC HIK AXIAL	0.1 uF	50V	Z		D005104097530	1
C479	ELECT GE 85C	33 uF	25V	M		D040330084100	1
C480	ELECT GE 85C	470 uF	10V	E		D040471082100	1
C481	ELECT GE 85C	33 uF	25V	M		D040330084100	1
C482	ELECT GE 85C	470 uF	10V	E		D040471082100	1
C483	ELECT GE 85C	33 uF	25V	M		D040330084100	1
C484	ELECT GE 85C	33 uF	25V	M		D040330084100	1
C489	ELECT GE 85C	47 uF	16V	M		D040470083100	1
C490	ELECT GE 85C	100 uF	16V	M		D040101083100	1

REF NO.	DESCRIPTION					PARTS NO.	Q'TY
C491	ELECT GE 85C	22 uF	16V	M		D040220083100	1
	CONNECTORS						
CN451	WAFER 2.0MM (16P)					L101352371610	1
CP601	WAFER 2.0MM (5P)					L101220050000	1
CP603	WAFER 2.0MM (4P)					L101220040010	1
	DIODES						
D450/D451	1N4148, SWITCHING					K000414801520	2
	INTEGRATED CIRCUITS						
IC450	LC7821, LOGIC					J040782100010	1
IC451	BA7625, VIDEO SW					J171762500000	1
IC452	MC14053, MOT					J040140530000	1
IC453	MC14094, LOGIC					J040140940000	1
IC454	LTV817, PHOTO COUPLER					K614817000001	1
	TRANSISTORS						
Q450/Q451	BKTA1267, PNP					J5001267Y0050	2
Q452	KTD1303, NPN					J503130300050	1
Q453	DTC114YS, NPN					J602011400050	1
Q454	KRA107M, PNP					J601107M00050	1
Q455	DTA114YS, PNP					J6000114Y0010	1
Q456	2KS117Y, FET					J5441170Y0050	1
	RESISTORS						
R451L/R	METAL FILM	470 ohm	1/5W	J		C06004716P520	2
R452L/R	METAL FILM	470 ohm	1/5W	J		C06004716P520	2
R453L/R	METAL FILM	470 ohm	1/5W	J		C06004716P520	2
R454L/R	METAL FILM	470 ohm	1/5W	J		C06004716P520	2
R455L/R	METAL FILM	470 ohm	1/5W	J		C06004716P520	2
R456	METAL FILM	220 ohm	1/5W	J		C06002216P520	1
R457	CHIP THICK	100 kohm	1/10W	J		C200010460200	1
R458-R463	METAL FILM	1 kohm	1/5W	J		C06001026P520	6
R464-R468	METAL FILM	3.3 kohm	1/5W	J		C06003326P520	5
R469	METAL FILM	10 ohm	1/5W	J		C06001006P520	1
R470	METAL FILM	220 ohm	1/5W	J		C06002216P520	1
R471/R472	METAL FILM	100 ohm	1/5W	J		C06001016P520	2
R473-R478	METAL FILM	75 ohm	1/5W	J		C06007506P520	6
R479/R480	METAL FILM	100 ohm	1/5W	J		C06001016P520	2
R481	CARBON FILM	220 kohm	1/5W	J		C00002246P520	1
R483	METAL FILM	1 kohm	1/5W	J		C06001026P520	1
R485	METAL FILM	1 kohm	1/5W	J		C06001026P520	1
R489	CARBON FILM	10 kohm	1/5W	J		C00001036P520	1
R490	METAL FILM	3.9 kohm	1/5W	J		C06003926P520	1
R491	METAL FILM	100 ohm	1/5W	J		C06001016P520	1
R493	METAL FILM	270 ohm	1/5W	J		C06002716P520	1
R494	METAL FILM	47 ohm	1/5W	J		C06004706P520	1
R495	CARBON FILM	47 kohm	1/5W	J		C00004736P520	1
R497	CARBON FILM	10 kohm	1/5W	J		C00001036P520	1
R498	CHIP THICK	100 kohm	1/10W	J		C200010460200	1
R499	CARBON FILM	100 kohm	1/5W	J		C00001046P520	1
R511	METAL FILM	470 ohm	1/5W	J		C06004716P520	1
PCB 4-2	**ASSEMBLY P.C. BOARD SPKR**						
	CAPACITORS						
C901C	FILM POLYESTER	0.047 uF	100V	J		D02047306C060	1
C901L	FILM POLYESTER	0.047 uF	100V	J		D02047306C060	1
C901R	FILM POLYESTER	0.047 uF	100V	J		D02047306C060	1
C901SL	FILM POLYESTER	0.047 uF	100V	J		D02047306C060	1
C901SR	FILM POLYESTER	0.047 uF	100V	J		D02047306C060	1
C902CD	CERAMIC HIK AXIAL	4700 pF	16V	X		D005472773530	1
C902LD	CERAMIC HIK AXIAL	4700 pF	16V	X		D005472773530	1
C902RD	CERAMIC HIK AXIAL	4700 pF	16V	X		D005472773530	1
C902SLD	CERAMIC HIK AXIAL	4700 pF	16V	X		D005472773530	1
C902SRD	CERAMIC HIK AXIAL	4700 pF	16V	X		D005472773530	1
C903CD	CERAMIC HIK AXIAL	4700 pF	16V	X		D005472773530	1
C903LD	CERAMIC HIK AXIAL	4700 pF	16V	X		D005472773530	1
C903RD	CERAMIC HIK AXIAL	4700 pF	16V	X		D005472773530	1
C903SLD	CERAMIC HIK AXIAL	4700 pF	16V	X		D005472773530	1
C903SRD	CERAMIC HIK AXIAL	4700 pF	16V	X		D005472773530	1
	CONNECTORS						
CP701	WAFER 3.96MM					L104353130400	1
CN901	WAFERN2.5MM (11P)					L102526681110	1
	COILS						
L901SL	INDUCTOR COIL					D330900001320	1
L901SR	INDUCTOR COIL					D330900001320	1
	RESISTORS						
R901C	METAL FILM	10 ohm	1W	J		C060010066520	1
R901L	METAL FILM	10 ohm	1W	J		C060010066520	1
R901R	METAL FILM	10 ohm	1W	J		C060010066520	1
R901SL	METAL FILM	10 ohm	1W	J		C060010066520	1
R901SR	METAL FILM	10 ohm	1W	J		C060010066520	1
R902SL	METAL FILM	10 ohm	1W	J		C060010065520	1
R902SR	METAL FILM	10 ohm	1W	J		C060010065520	1

REF NO.	DESCRIPTION				PARTS NO.	Q'TY
PCB 5	**ASSEMBLY P.C. BOARD TUNER**				**7028040956000**	
	CAPACITORS					
C1	CERAMIC HIK AXIAL	0.022 uF	25V	Z	D005223574530	1
C10	CERAMIC DISC	100 pF	50V	J	D004101067060	1
C11	ELECTROLYTIC SG	47 uF	16V	M	D040470083100	1
C12	CERAMIC DISC	0.022 uF	50V	Z	D004223097060	1
C13	CERAMIC TUBULAR	0.022 uF	25V	Z	D005223574530	1
C14	ELECTROLYTIC SG	100 uF	16V	M	D040101083100	1
C15	POLY	470 pF	50V	J	D022471067050	1
C16	CERAMIC DISC CH	15 pF	50V	J	D000150167070	1
C17/C18	CERAMIC TUBULAR	0.022 uF	25V	Z	D005223574530	2
C2	CERAMIC DISC	0.047 uF	50V	Z	D004473097060	1
C20	ELECTROLYTIC SG	10 uF	35V	M	D040100085100	1
C21/C22	CERAMIC TUBULAR	0.022 uF	25V	Z	D005223574530	2
C23	CERAMIC TUBULAR	0.01 uF	16V	Y	D005103773530	1
C24/C25	CERAMIC DISC	0.022 uF	50V	Z	D004223097060	2
C26	ELECTROLYTIC SG	4.7 uF	50V	M	D0404R7087100	1
C27	ELECTROLYTIC SG	3.3 uF	50V	M	D0403R3087100	1
C28	ELECTROLYTIC SG	4.7 uF	50V	M	D0404R7087100	1
C29	CERAMIC DISC	0.022 uF	50V	Z	D004223097060	1
C3	ELECTROLYTIC SG	3.3 uF	50V	M	D0403R3087100	1
C30	CERAMIC DISC	0.022 uF	50V	Z	D004223097060	1
C31	MYLAR	0.003 uF	100V	J	D02033206C060	1
C32	MYLAR	0.039 uF	100V	J	D02039306C060	1
C33	ELECT GE 85C	0.47 uF	50V	M	D040R47087100	1
C34	CERAMIC TUBULAR	0.022 uF	25V	Z	D005223574530	1
C35	ELECTROLYTIC SG	100 uF	16V	M	D040101083100	1
C36	CERAMIC DISC	100 pF	50V	J	D004101067060	1
C37	CERAMIC DISC	82 pF	50V	J	D000820067060	1
C38	C,CERAMIC HIK DISC	100 pF	50V	J	D004101067060	1
C39	ELECTROLYTIC SG	10 uF	35V	M	D040100085100	1
C4	CERAMIC TUBULAR	0.01 uF	16V	Y	D005103773530	1
C40	CERAMIC TUBULAR	0.022 uF	25V	Z	D005223574530	1
C41	ELECT GE 85C	10 uF	35V	M	D040100085100	1
C42	CERAMIC TUBULAR	0.047 uF	50V	F	D005473097530	1
C43	FILM STYLOR	680 pF	50V	J	D022681067050	1
C44	ELECTROLYTIC SG	100 uF	16V	M	D040101083100	1
C45	ELECTROLYTIC SG	1 uF	50V	M	D040010087050	1
C46	ELECTROLYTIC SG	0.22 uF	50V	M	D040R22087100	1
C47	ELECTROLYTIC SG	1 uF	50V	M	D040010087050	1
C48	CERAMIC DISC	0.022 uF	50V	Z	D004223097060	1
C49	ELECTROLYTIC SG	10 uF	35V	M	D040100085100	1
C5	ELECTROLYTIC SG	47 uF	16V	M	D040470083100	1
C50L/R	CERAMIC DISC	220 pF	50V	J	D004221067060	2
C51L/R	ELECTROLYTIC SG	10 uF	35V	M	D040100085100	2
C53	ELECTROLYTIC SG	10 uF	35V	M	D040100085100	1
C54	CERAMIC HIK AXIAL	270 pF	50V	K	D005271077530	1
C55	ELECTROLYTIC SG	47 uF	16V	M	D040470083100	1
C56	ELECTROLYTIC SG	10 uF	35V	M	D040100085100	1
C57	CERAMIC HIK AXIAL	0.1 uF	50V	Z	D005104097530	1
C58/C59	CERAMIC DISC	27 pF	50V	J	D004270067060	2
C6	CERAMIC TUBULAR	0.022 uF	25V	Z	D005223574530	1
C60	ELECTROLYTIC SG	0.1 uF	50V	Z	D004104097060	1
C61	ELECT GE 85C	10 uF	35V	M	D040100085100	1
C62L/R	CERAMIC DISC	10 pF	50V	J	D000100067060	2
C7	CERAMIC TUBULAR	0.01 uF	16V	Y	D005103773530	1
C8/C9	CERAMIC UNKNOWN	12 pF	50V	J	D009791201300	2
	CERAMIC FILTERS					
CF1-CF3	10.7MA8-A-TF21				E430107000140	3
CF4	CFM2-450BL				E431450000120	1
	CONNECTOR					
CN100	PLUG, 15P				L112524191900	1
	DIODES					
D1	ZENER, 5.1V				K06005R114520	1
D2	1N4148, SWITCHING				K000414801520	1
D3	ZENER, 5.1V				K06005R114520	1
D4	1N4148, SWITCHING				K000414801520	1
D5	1N4148, SWITCHING				K000414801520	1
	INTEGRATED CIRCUITS					
IC1	LM7001M, PLL				J124700100010	1
IC2	LA1266G, AM/FM IF				J124126600010	1
IC3	LA3401, MPX				J124340100010	1
IC4	TDA7330BD, RDS DECODER				J020733000010	1
IC5	LC7073M, ERROR CORRECTION				J124707300010	1
	TRANSISTORS					
Q1/Q2	2SC1740S, NPN				J5021740S0010	2
Q3	KTC1923Y/BKTC3194Y, NPN				J5023194Y0050	1
Q4-Q6	KRA107M/DTA114YS, PNP				J601107M00050	3
Q7	2SC1740S, NPN				J5021740S0010	1
Q8L/R	DTC323TS, NPN				J602323TS0050	2
Q9	KRA107M/DTA114YS, PNP				J601107M00050	1

REF NO.	DESCRIPTION				PARTS NO.	Q'TY
	RESISTORS					
R1	CHIP THICK	100 kohm	1/10W	J	C200010460200	1
R10	METAL FILM	1 kohm	1/5W	J	C06001026P520	1
R11	METAL FILM	180 ohm	1/5W	J	C06001816P520	1
R12	METAL FILM	560 ohm	1/5W	J	C06005616P520	1
R13	METAL FILM	3.3 kohm	1/5W	J	C06003326P520	1
R14	METAL FILM	560 ohm	1/5W	J	C06005616P520	1
R15	METAL FILM	470 ohm	1/5W	J	C06004716P520	1
R16	METAL FILM	100 ohm	1/5W	J	C06001016P520	1
R17-R19	METAL FILM	1 kohm	1/5W	J	C06001026P520	3
R2	CARBON FILM	5.6 kohm	1/5W	J	C00005626P520	1
R20	METAL FILM	330 ohm	1/5W	J	C06003316P520	1
R21	METAL FILM	270 ohm	1/5W	J	C06002716P520	1
R22	METAL FILM	470 ohm	1/5W	J	C06004716P520	1
R24	METAL FILM	4.7 kohm	1/5W	J	C06004726P520	1
R25	CARBON FILM	68 kohm	1/5W	J	C00006836P520	1
R26	CARBON FILM	47 kohm	1/5W	J	C00004736P520	1
R27	CARBON FILM	10 kohm	1/5W	J	C00001036P520	1
R28	CARBON FILM	22 kohm	1/5W	J	C00002236P520	1
R29	METAL FILM	22 ohm	1/5W	J	C06002206P520	1
R3	CARBON FILM	62 kohm	1/5W	J	C00006236P520	1
R30	METAL FILM	4.7 kohm	1/5W	J	C06004726P520	1
R32	CARBON FILM	10 kohm	1/5W	J	C00001036P520	1
R33	METAL FILM	3.3 kohm	1/5W	J	C06003326P520	1
R34	METAL FILM	100 ohm	1/5W	J	C06001016P520	1
R34	METAL FILM	100 ohm	1/5W	J	C06001016P520	1
R35	METAL FILM	1.8 kohm	1/5W	J	C06001826P520	1
R36	CARBON FILM	47 kohm	1/5W	J	C00004736P520	1
R37	METAL FILM	22 ohm	1/5W	J	C06002206P520	1
R38	METAL FILM	1 kohm	1/5W	J	C06001026P520	1
R39	METAL FILM	100 ohm	1/5W	J	C06001016P520	1
R4	CARBON FILM	100 kohm	1/5W	J	C00001046P520	1
R40	CARBON FILM	47 kohm	1/5W	J	C00004736P520	1
R41	CARBON FILM	22 kohm	1/5W	J	C00002236P520	1
R42	METAL FILM	3.3 kohm	1/5W	J	C06003326P520	1
R43	CARBON FILM	22 kohm	1/5W	J	C00002236P520	1
R44	CARBON FILM	47 kohm	1/5W	J	C00004736P520	1
R46 L/R	CARBON FILM	220 kohm	1/5W	J	C00002246P520	2
R47L/R	CARBON FILM	270 kohm	1/5W	J	C00002746P520	2
R48L/R	METAL FILM	2.7 kohm	1/5W	J	C06002726P520	2
R49L/R	METAL FILM	3.3 kohm	1/5W	J	C06003326P520	2
R5	METAL FILM	470 ohm	1/5W	J	C06004716P520	1
R50	METAL FILM	680 ohm	1/5W	J	C06006816P520	1
R51-R54	CARBON FILM	10 kohm	1/5W	J	C00001036P520	4
R55	CARBON FILM	100 kohm	1/5W	J	C00001046P520	1
R56	CARBON FILM	2.2 Mohm	1/5W	J	C00002256P520	1
R6	CARBON FILM	100 kohm	1/5W	J	C00001046P520	1
R7	CARBON FILM	10 kohm	1/5W	J	C00001036P520	1
R8	METAL FILM	270 ohm	1/5W	J	C06002716P520	1
R9	METAL FILM	560 ohm	1/5W	J	C06005616P520	1
	COILS					
T1	AM-ANT				D304564300000	1
T2	AM-OSC				D940111027000	1
T3	AM-IFT				D950010050000	1
T4	FM-DET-A				D970010020000	1
T5	FM-DET-B				D970010030000	1
T6L/R	MPX(19/38kHz)				E401500100000	2
	SEMI FLXED VARIABLE RESISTORS					
VR1/VR2	SEMI, 50K				C541503115000	2
VR3	SEMI, 500K				C541504115000	1
	MISCELLANEOUS					
ANT1	TERMINAL ANT				G590040470000	1
FE1	FM TUNER, FTH4-460H				E900446000110	1
L1	COIL INDUCTOR 20.8MH				D330208001120	1
TC1	CAPACITOR TREMMER, 10 pF				D110100901100	1
VD1/VD2	VARACTOR, SVC321 SPA-C				K080032100520	1
X1	X-TAL, 7.2MHz				E800720000090	1
X2	CRYSTAL, CSB456F				E830456000050	1
X3	X-TAL, 4.332MHZ				E800433200050	1
X4	RESONATOR, CST4.00MGW-TF01				E830400000070	1
PCB 6	**ASSEMBLY P.C. BOARD PROCESSOR**				**7028040956200**	
	CAPACITORS					
C501L/R	FILM POLYESTER	0.1 uF	63V	J	D020104068050	2
C502L/R	FILM POLYESTER	0.1 uF	63V	J	D020104068050	2
C503L/R	CERAMIC T.C AXIAL	100 pF	50V	J	D001101077530	2
C504L/R	ELECT GE 85C	2.2 uF	50V	M	D0402R2087100	2
C505L/R	ELECT GE 85C	2.2 uF	50V	M	D0402R2087100	2
C506L/R	ELECT GE 85C	4.7 uF	50V	M	D0404R7087100	2
C507	CERAMIC T.C AXIAL	100 pF	50V	J	D001101077530	1
C508L/R	ELECT GE 85C	4.7 uF	50V	M	D0404R7087100	2
C509L/R	CERAMIC T.C AXIAL	100 pF	50V	J	D001101077530	2
C510L/R	ELECT GE 85C	0.47 uF	50V	M	D040R47087100	2

REF NO.	DESCRIPTION				PARTS NO.	Q'TY
C511L/R	CERAMIC CHIP T.C	22 pF	50V	J	D010220167210	2
C512L/R	ELECT GE 85C	4.7 uF	50V	M	D0404R7087100	2
C513L/R	CERAMIC HIK AXIAL	0.1 uF	50V	Z	D005104097530	2
C514L/R	ELECT GE 85C	4.7 uF	50V	M	D0404R7087100	2
C516	ELECT GE 85C	47 uF	25V	M	D040470084100	1
C517L	ELECT GE 85C	10 uF	50V	M	D040100087050	1
C518LD	CERAMIC T.C AXIAL	100 pF	50V	J	D001101077530	1
C518RD	CERAMIC T.C AXIAL	100 pF	50V	J	D001101077530	1
C519	ELECT GE 85C	47 uF	25V	M	D040470084100	1
C520	ELECT GE 85C	1 uF	50V	M	D040010087050	1
C521-C523	ELECT GE 85C	47 uF	25V	M	D040470084100	3
C524	CERAMIC T.C AXIAL	100 pF	50V	J	D001101077530	1
C525	ELECT GE 85C	2.2 uF	50V	M	D0402R2087100	1
C526/C527	FILM POLYESTER	0.1 uF	63V	J	D020104068050	2
C528	CERAMIC T.C AXIAL	100 pF	50V	J	D001101077530	1
C529	ELECT GE 85C	2.2 uF	50V	M	D0402R2087100	1
C530/C531	ELECT GE 85C	4.7 uF	50V	M	D0404R7087100	2
C532	CERAMIC T.C AXIAL	100 pF	50V	J	D001101077530	1
C533	CERAMIC HIK AXIAL	0.1 uF	50V	Z	D005104097530	1
C534	ELECT GE 85C	0.47 uF	50V	M	D040R47087100	1
C535	CERAMIC CHIP T.C	22 pF	50V	J	D010220167210	1
C536/C537	ELECT GE 85C	4.7 uF	50V	M	D0404R7087100	2
C538/C539	CERAMIC T.C AXIAL	100 pF	50V	J	D001101077530	2
C540	ELECT GE 85C	10 uF	50V	M	D040100087050	1
C541D	CERAMIC T.C AXIAL	100 pF	50V	J	D001101077530	1
C542	CERAMIC T.C AXIAL	100 pF	50V	J	D001101077530	1
C543LD	CERAMIC T.C AXIAL	100 pF	50V	J	D001101077530	1
C543RD	CERAMIC T.C AXIAL	100 pF	50V	J	D001101077530	1
C544L/R	FILM POLYESTER	0.1 uF	63V	K	D020104078060	2
C545L/R	FILM POLYESTER	0.1 uF	63V	K	D020104078060	2
C546L/R	CERAMIC T.C AXIAL	100 pF	50V	J	D001101077530	2
C547L/R	ELECT GE 85C	2.2 uF	50V	M	D0402R2087100	2
C548L/R	ELECT GE 85C	2.2 uF	50V	M	D0402R2087100	2
C549L/R	ELECT GE 85C	2.2 uF	50V	M	D0402R2087100	2
C550L/R	CERAMIC T.C AXIAL	100 pF	50V	J	D001101077530	2
C551L/R	ELECT GE 85C	2.2 uF	50V	M	D0402R2087100	2
C552L/R	CERAMIC T.C AXIAL	100 pF	50V	J	D001101077530	2
C553L/R	CERAMIC HIK AXIAL	0.1 uF	50V	Z	D005104097530	2
C554L/R	ELECT GE 85C	0.47 uF	50V	M	D040R47087100	2
C555L/R	CERAMIC CHIP T.C	22 pF	50V	J	D010220167210	2
C556L/R	ELECT GE 85C	4.7 uF	50V	M	D0404R7087100	2
C557L/R	CERAMIC T.C AXIAL	100 pF	50V	J	D001101077530	2
C558L/R	ELECT GE 85C	4.7 uF	50V	M	D0404R7087100	2
C560L/R	ELECT GE 85C	10 uF	50V	M	D040100087050	2
C561LD	CERAMIC T.C AXIAL	100 pF	50V	J	D001101077530	1
C561RD	CERAMIC T.C AXIAL	100 pF	50V	J	D001101077530	1
C562	ELECT GE 85C	47 uF	25V	M	D040470084100	1
C563	CERAMIC T.C AXIAL	100 pF	50V	J	D001101077530	1
C564	CERAMIC HIK AXIAL	0.1 uF	50V	Z	D005104097530	1
C565L/R	FILM STYLOR	470 pF	50V	J	D022471067050	2
C566/C567	ELECT GE 85C	2.2 uF	50V	M	D0402R2087100	2
C568/C569	FILM POLYESTER	0.027 uF	63V	J	D020273068050	2
C570	ELECT GE 85C	2.2 uF	50V	M	D0402R2087100	1
C571	CERAMIC T.C AXIAL	100 pF	50V	J	D001101077530	1
C572	CERAMIC HIK AXIAL	0.1 uF	50V	Z	D005104097530	1
C573	ELECT GE 85C	0.47 uF	50V	M	D040R47087100	1
C574	CERAMIC CHIP T.C	22 pF	50V	J	D010220167210	1
C575/C576	ELECT GE 85C	4.7 uF	50V	M	D0404R7087100	2
C577	CERAMIC T.C AXIAL	100 pF	50V	J	D001101077530	1
C579	ELECT GE 85C	10 uF	50V	M	D040100087050	1
C580D	CERAMIC T.C AXIAL	100 pF	50V	J	D001101077530	1
C581	CERAMIC HIK AXIAL	0.1 uF	50V	Z	D005104097530	1
C582L/R	CERAMIC HIK AXIAL	220 pF	50V	B	D005221077530	2
C583	CERAMIC HIK AXIAL	220 pF	50V	B	D005221077530	1
C584	CERAMIC CHIP T.C	0.0056 uF	50V	B	D011562177210	1
	CONNECTORS					
CN203	WIRE, 1533#26 2.0				L021102277320	1
CN501	WAFER 2.0MM (19P)				L101352371910	1
CN502	WAFER 2.0MM (15P)				L101352371510	1
CN503	CNT PLUG AC 1P				L103010000000	1
CP602	WAFER 2.0MM (9P)				L101220090000	1
	DIODES					
D501-D509	1N4148M, SWITCHING				K000414801520	9
D510	ZENER, 5.1V				K06005R114520	1
	INTEGRATED CIRCUITS					
IC501	LC7822, ANALOG				J080782200000	1
IC502	MC14053, ANALOG				J080140530010	1
IC503-IC505	LC7536, ELECT VR				J084753600010	3
IC506/IC507	NJM2068DD, LINEAR OP				J121206800000	2
IC509/IC510	NJM4580L, LINEAR OP				J121458000030	2
IC511/IC512	NJM2068DD, LINEAR OP				J121206800000	2
IC513	NJM4580L, LINEAR OP				J121458000030	1
IC514	NJM2068DD, LINEAR OP				J121206800000	1
IC515	NJM4580L, LINEAR OP				J121458000030	1
IC516/IC517	NJM2068DD, LINEAR OP				J121206800000	2
IC518/IC519	NJM4580L, LINEAR OP				J121458000030	2
	TRANSISTORS					
Q501-Q504	DTA114YS, PNP				J6000114Y0010	4
Q505L/R	KTD1302, NPN				J5031302B0050	2
Q506/Q507	KTD1302, NPN				J5031302B0050	2
Q508L/R	KTD1302, NPN				J5031302B0050	2
Q509L/R	2SK117Y, FET				J5441170Y0050	2
Q510L/R	2SK117Y, FET				J5441170Y0050	2
	RESISTORS					
R500	CHIP THICK	820 kohm	1/10W	J	C200082460200	1
R501L/R	CHIP THICK	100 kohm	1/10W	J	C200010460200	2
R502L/R	CHIP THICK	22 kohm	1/10W	J	C200022360200	2
R503L/R	CHIP THICK	10 kohm	1/10W	J	C200010360200	2
R504L/R	CHIP THICK	100 kohm	1/10W	J	C200010460200	2
R505L/R	CHIP THICK	100 kohm	1/10W	J	C200010460200	2
R506L/R	CHIP THICK	10 kohm	1/10W	J	C200010360200	2
R507L/R	CARBON FILM	220 kohm	1/5W	J	C00002246P520	2
R508L/R	CHIP THICK	56 kohm	1/10W	J	C200056360200	2
R509L/R	METAL FILM	1.5 kohm	1/5W	J	C06001526P520	2
R510	CHIP THICK	100 kohm	1/10W	J	C200010460200	1
R511L/R	METAL FILM	470 ohm	1/5W	J	C06004716P520	2
R512/R513	METAL FILM	47 ohm	1/5W	J	C06004706P520	2
R514L/R	CHIP THICK	100 kohm	1/10W	J	C200010460200	2
R515L/R	CHIP THICK	820 kohm	1/10W	J	C200082460200	2
R516L/R	CHIP THICK	100 kohm	1/10W	J	C200010460200	2
R517/R518	METAL FILM	1 kohm	1/5W	J	C06001026P520	2
R519L/R	METAL FILM	1 kohm	1/5W	J	C06001026P520	2
R520L/R	CARBON FILM	2.2 kohm	1/4W	J	C000022263520	2
R521	CHIP THICK	100 kohm	1/10W	J	C200010460200	1
R522	METAL FILM	47 ohm	1/5W	J	C06004706P520	1
R523	CHIP THICK	100 kohm	1/10W	J	C200010460200	1
R524	CHIP THICK	10 kohm	1/10W	J	C200010360200	1
R525	CARBON FILM	22 kohm	1/5W	J	C00002236P520	1
R526	CHIP THICK	100 kohm	1/10W	J	C200010460200	1
R527	METAL FILM	1.5 kohm	1/5W	J	C06001526P520	1
R528	CARBON FILM	22 kohm	1/5W	J	C00002236P520	1
R529/R530	CHIP THICK	100 kohm	1/10W	J	C200010460200	2
R531L/R	METAL FILM	1 kohm	1/5W	J	C06001026P520	2
R532	METAL FILM	1 kohm	1/5W	J	C06001026P520	1
R533	METAL FILM	47 ohm	1/5W	J	C06004706P520	1
R534	CARBON FILM	2.2 kohm	1/4W	J	C000022263520	1
R535/R536	CHIP THICK	100 kohm	1/10W	J	C200010460200	2
R537/R538	CARBON FILM	33 kohm	1/5W	J	C00003336P520	2
R539	CHIP THICK	10 kohm	1/10W	J	C200010360200	1
R540/R541	CARBON FILM	33 kohm	1/5W	J	C00003336P520	2
R542	CARBON FILM	5.6 kohm	1/5W	J	C00005626P520	1
R543	METAL FILM	4.7 kohm	1/5W	J	C06004726P520	1
R544	CHIP THICK	82 kohm	1/10W	J	C200082360200	1
R545	CARBON FILM	15 kohm	1/5W	J	C00001536P520	1
R546	CHIP THICK	51 kohm	1/10W	J	C200051360200	1
R547L/R	METAL FILM	1 kohm	1/5W	J	C06001026P520	2
R548	CHIP THICK	100 kohm	1/10W	J	C200010460200	1
R549L/R	CARBON FILM	3.3 Mohm	1/5W	J	C00003356P520	2
R550L/R	CARBON FILM	3.3 Mohm	1/5W	J	C00003356P520	2
R551	CHIP THICK	100 kohm	1/10W	J	C200010460200	1
R552	METAL FILM	1.5 kohm	1/5W	J	C06001526P520	1
R553	CHIP THICK	6.2 kohm	1/10W	J	C200062260200	1
R554	METAL FILM	4.7 kohm	1/5W	J	C06004726P520	1
R555	METAL FILM	2.2 Mohm	1/5W	J	C06002226P520	1
R556L/R	CHIP THICK	100 kohm	1/10W	J	C200010460200	2
R557L/R	CHIP THICK	10 kohm	1/10W	J	C200010360200	2
R558L/R	CARBON FILM	22 kohm	1/5W	J	C00002236P520	2
R559L/R	CHIP THICK	100 kohm	1/10W	J	C200010460200	2
R560L/R	CHIP THICK	100 kohm	1/10W	J	C200010460200	2
R561L/R	METAL FILM	1.5 kohm	1/5W	J	C06001526P520	2
R562L/R	CARBON FILM	22 kohm	1/5W	J	C00002236P520	2
R563L/R	CHIP THICK	100 kohm	1/10W	J	C200010460200	2
R564L/R	CHIP THICK	820 kohm	1/10W	J	C200082460200	2
R565L/R	CHIP THICK	100 kohm	1/10W	J	C200010460200	2
R566	METAL FILM	1 kohm	1/5W	J	C06001026P520	1
R567L/R	METAL FILM	1 kohm	1/5W	J	C06001026P520	2
R568L/R	METAL FILM	4.7 kohm	1/5W	J	C06004726P520	2
R569L/R	METAL FILM	2.2 kohm	1/5W	J	C06002226P520	2
R570-R573	CARBON FILM	15 kohm	1/5W	J	C00001536P520	3
R574	CARBON FILM	2.2 kohm	1/4W	J	C000022263520	1
R575	CHIP THICK	10 kohm	1/10W	J	C200010360200	1
R576/R577	METAL FILM	1 kohm	1/5W	J	C06001026P520	2
R578	CHIP THICK	10 kohm	1/10W	J	C200010360200	1
R579	METAL FILM	4.7 kohm	1/5W	J	C06004726P520	1
R580L/R	METAL FILM	470 ohm	1/5W	J	C06004716P520	2
R581L/R	METAL FILM	47 ohm	1/5W	J	C06004706P520	2
R582 L/R	METAL FILM	1.8 kohm	1/5W	J	C06001826P520	2
R583	METAL FILM	2.7 kohm	1/5W	J	C06002726P520	1
R584	METAL FILM	3.9 kohm	1/5W	J	C06003926P520	1
R585	METAL FILM	47 ohm	1/5W	J	C06004706P520	1
R586	CARBON FILM	33 kohm	1/5W	J	C00003336P520	1

REF NO.	DESCRIPTION					PARTS NO.	Q'TY
R587	METAL FILM	4.7	kohm	1/5W	J	C06004726P520	1
R588	METAL FILM	1	kohm	1/5W	J	C06001026P520	1
R589L/R	CHIP THICK	100	kohm	1/10W	J	C200010460200	2
R590	METAL FILM	4.7	kohm	1/5W	J	C06004726P520	1
R591	METAL FILM	47	ohm	1/5W	J	C06004706P520	1
R592L/R	METAL FILM	3.9	kohm	1/5W	J	C06003926P520	2
R593	CHIP THICK	820	kohm	1/10W	J	C200082460200	1
PCB 7	**ASSEMBLY P.C. BOARD AC-3**					**7028040956400**	
	CAPACITORS						
C801	CERAMIC HIK AXIAL	0.022	uF	25V	Z	D005223574530	1
C802-C804	CERAMIC HIK AXIAL	0.1	uF	50V	Z	D005104097530	3
C805	ELECT GE 85C	47	uF	25V	M	D040470084100	1
C806	CERAMIC HIK AXIAL	0.1	uF	50V	Z	D005104097530	1
C807	ELECT GE 85C	47	uF	25V	M	D040470084100	1
C808	CERAMIC CHIP T.C	75	pF	50V	J	D010750167210	1
C809	CERAMIC HIK AXIAL	10000	pF	16V	Y	D005103773530	1
C810/C811	CERAMIC HIK AXIAL	0.1	uF	50V	Z	D005104097530	2
C812	CERAMIC HIK AXIAL	10000	pF	16V	Y	D005103773530	1
C813	CERAMIC CHIP T.C	0.001	uF	50V	J	D010102167210	1
C814	ELECT GE 85C	1	uF	50V	M	D040010087050	1
C815	CERAMIC HIK AXIAL	0.1	uF	50V	Z	D005104097530	1
C816	ELECT GE 85C	47	uF	25V	M	D040470084100	1
C817	ELECT GE 85C	1	uF	50V	M	D040010087050	1
C818	ELECT GE 85C	47	uF	25V	M	D040470084100	1
C819-C821	CERAMIC HIK AXIAL	0.1	uF	50V	Z	D005104097530	3
C822/C823	CERAMIC HIK AXIAL	2200	pF	16V	K	D005222773530	2
C825/C826	ELECT GE 85C	47	uF	25V	M	D040470084100	2
C828	CERAMIC CHIP T.C	0.015	uF	50V	B	D011153177210	1
C829	CERAMIC CHIP HIK	1500	pF	16V	X	D005152773530	1
C830/C831	CERAMIC CHIP T.C	33	pF	50V	J	D010330167210	2
C832	ELECT GE 85C	1	uF	50V	M	D040010087050	1
C833	CERAMIC HIK AXIAL	0.1	uF	50V	Z	D005104097530	1
C834	CERAMIC CHIP T.C	22	pF	50V	J	D010220167210	1
C835	CERAMIC T.C AXIAL	10	pF	50V	J	D001100067530	1
C836	ELECT GE 85C	22	uF	16V	M	D040220083100	1
C837	CERAMIC HIK AXIAL	0.1	uF	50V	Z	D005104097530	1
C838	ELECT GE 85C	1000	uF	6.3V	M	D040102081000	1
C839/C840	CERAMIC HIK AXIAL	0.1	uF	50V	Z	D005104097530	2
C841	ELECT GE 85C	1000	uF	6.3V	M	D040102081000	1
C842	CERAMIC CHIP T.C	0.01	uF	50V	B	D011103177210	1
C843L/R	CERAMIC CHIP HIK	1500	pF	16V	X	D005152773530	2
C845L	ELECT GE 85C	10	uF	50V	M	D040100087050	1
C845R	ELECT GE 85C	10	uF	50V	M	D040100087050	1
C846C	ELECT GE 85C	10	uF	35V	M	D040100085100	1
C846L	ELECT GE 85C	10	uF	35V	M	D040100085100	1
C846R	ELECT GE 85C	10	uF	35V	M	D040100085100	1
C846SL	ELECT GE 85C	10	uF	35V	M	D040100085100	1
C846SR	ELECT GE 85C	10	uF	35V	M	D040100085100	1
C846W	ELECT GE 85C	10	uF	35V	M	D040100085100	1
C847/C848	CERAMIC HIK AXIAL	0.1	uF	50V	Z	D005104097530	2
C849	ELECT GE 85C	47	uF	25V	M	D040470084100	1
C850	CERAMIC HIK AXIAL	0.1	uF	50V	Z	D005104097530	1
C851	CERAMIC CHIP T.C	2	pF	50V		D010020117210	1
C852	CERAMIC T.C DISC	18	pF	50V	J	D000180167070	1
C852C/W	CERAMIC CHIP HIK	1500	pF	16V	X	D005152773530	2
C853	ELECT GE 85C	47	uF	25V	M	D040470084100	1
C854	CERAMIC HIK AXIAL	10000	pF	16V	Y	D005103773530	1
C854C/W	ELECT GE 85C	10	uF	50V	M	D040100087050	2
C855	ELECT GE 85C	100	uF	10V	M	D040101082100	1
C857	CERAMIC CHIP T.C	22	pF	50V	J	D010220167210	1
C858	CERAMIC HIK AXIAL	10000	pF	16V	Y	D005103773530	1
C859/C860	CERAMIC HIK AXIAL	0.1	uF	50V	Z	D005104097530	2
C860SL	CERAMIC CHIP HIK	1500	pF	16V	X	D005152773530	1
C860SR	CERAMIC CHIP HIK	1500	pF	16V	X	D005152773530	1
C861/C862	ELECT GE 85C	3.3	uF	50V	M	D0403R3087100	2
C863L/R	CERAMIC CHIP HIK	1500	pF	16V	X	D005152773530	2
C864	ELECT GE 85C	47	uF	25V	M	D040470084100	1
C865C	CERAMIC CHIP HIK	1500	pF	16V	X	D005152773530	1
C865W	CERAMIC CHIP HIK	1500	pF	16V	X	D005152773530	1
C866SL	ELECT GE 85C	10	uF	50V	M	D040100087050	1
C866SR	ELECT GE 85C	10	uF	50V	M	D040100087050	1
C867	ELECT GE 85C	47	uF	25V	M	D040470084100	1
C868SL	CERAMIC CHIP HIK	1500	pF	16V	X	D005152773530	1
C868SR	CERAMIC CHIP HIK	1500	pF	16V	X	D005152773530	1
C869-C875	CERAMIC HIK AXIAL	0.1	uF	50V	Z	D005104097530	7
C876	ELECT GE 85C	1	uF	50V	M	D040010087050	1
C877L	CERAMIC HIK AXIAL	4700	pF	16V	X	D005472773530	1
C877R	CERAMIC HIK AXIAL	4700	pF	16V	X	D005472773530	1
C877C	CERAMIC HIK AXIAL	4700	pF	16V	X	D005472773530	1
C877W	CERAMIC HIK AXIAL	4700	pF	16V	X	D005472773530	1
C877R	CERAMIC HIK AXIAL	4700	pF	16V	X	D005472773530	1
C877SL	CERAMIC HIK AXIAL	4700	pF	16V	X	D005472773530	1
C877SR	CERAMIC HIK AXIAL	4700	pF	16V	X	D005472773530	1
C877W	CERAMIC HIK AXIAL	4700	pF	16V	X	D005472773530	1
C880/C881	ELECT GE 85C	10	uF	35V	M	D040100085100	2
C882-C891	CERAMIC HIK AXIAL	0.1	uF	50V	Z	D005104097530	10
C883	CERAMIC HIK AXIAL	0.1	uF	50V	Z	D005104097530	1

REF NO.	DESCRIPTION					PARTS NO.	Q'TY
C884	CERAMIC HIK AXIAL	0.1	uF	50V	Z	D005104097530	1
C885	CERAMIC HIK AXIAL	0.1	uF	50V	Z	D005104097530	1
C886	CERAMIC HIK AXIAL	0.1	uF	50V	Z	D005104097530	1
C890	CERAMIC HIK AXIAL	0.1	uF	50V	Z	D005104097530	1
C891	CERAMIC HIK AXIAL	0.1	uF	50V	Z	D005104097530	1
C892	ELECT BP	47	uF	10V	M	D042470082110	1
C893	ELECT GE 85C	10	uF	50V	M	D040100087050	1
C894-C896	CERAMIC HIK AXIAL	10000	pF	16V	Y	D005103773530	3
C897	ELECT GE 85C	1	uF	50V	M	D040010087050	1
	CONNECTORS						
CN801	WAFER 2.0MM (11P)					L101352371110	1
CN802	WAFER 2.0MM (14P)					L101352371410	1
	DIODES						
D801-D805	1N4148M, SWITCHING					K000414801520	5
	INTEGRATED CIRCUITS						
IC801	MC14577BP, MONITOR					J170145770000	1
IC803	PM4007A, ANALOG					J080400700010	1
IC804	KM68257CJ, MEMORY RAM					J001682510010	1
IC805	NJM2068M, LINEAR OP					J121206800020	1
IC806	CS4226, ANALOG					J080422600010	1
IC807	MC56009F, ANALOG					J080560098110	1
IC808	MC74HC76N, LOGIC					J040747600040	1
IC809	MC74HCU04AD, LOGIC					J040740400200	1
IC810	UPD78042FGF-061-3B9,DWP203A					J020780420710	1
IC811/IC812	HY534256, MEMORY RAM					J001534256000	2
IC813	74HC04, LOGIC					J040740400210	1
IC814-IC816	NJM2068M, LINEAR OP					J121206800020	3
	COILS						
L801/L802	COIL INDUCTOR 68UH					D330680001020	2
L803-L805	BEAD COIL CHIP TYPE					7611010000000	3
	TRANSISTORS						
Q801/Q802	2SC1740S, NPN					J5021740S0010	2
Q803/Q804	2SA933S, PNP					J5000933S0050	2
Q805/Q806	2SC1740S, NPN					J5021740S0010	2
Q807	DTC114TS, PNP					J600114TS0050	1
Q808	DTA114YS, PNP					J6000114Y0010	1
Q809L	DTC323TK, NPN					J502323000050	1
Q809R	DTC323TK, NPN					J502323000050	1
Q812	DTC114YS, NPN					J6020114Y0050	1
	RESISTORS						
R750	CARBON FILM	100	kohm	1/5W	J	C00001046P520	1
R750C	CARBON FILM	100	kohm	1/5W	J	C00001046P520	1
R750W	CARBON FILM	100	kohm	1/5W	J	C00001046P520	1
R751	CHIP THICK	220	kohm	1/10W	J	C200022460200	1
R752L/R	METAL FILM	100	ohm	1/5W	J	C06001016P520	2
R753L/R	METAL FILM	3.3	kohm	1/5W	J	C06003326P520	2
R754	METAL FILM	3.3	kohm	1/5W	J	C06003326P520	1
R754L	CARBON FILM	100	kohm	1/5W	J	C00001046P520	1
R754R	CARBON FILM	100	kohm	1/5W	J	C00001046P520	1
R755L/R	METAL FILM	1	kohm	1/5W	J	C06001026P520	2
R756/R757	CARBON FILM	15	ohm	1/10W	J	C200015060200	2
R758C/W	METAL FILM	100	ohm	1/5W	J	C06001016P520	2
R759C/W	METAL FILM	3.3	kohm	1/5W	J	C06003326P520	2
R761C/W	METAL FILM	1	kohm	1/5W	J	C06001026P520	2
R762L	METAL FILM	3.3	kohm	1/5W	J	C06003326P520	1
R762R	METAL FILM	3.3	kohm	1/5W	J	C06003326P520	1
R763C/W	METAL FILM	3.3	kohm	1/5W	J	C06003326P520	2
R764SL	METAL FILM	3.3	kohm	1/5W	J	C06003326P520	1
R764SR	METAL FILM	3.3	kohm	1/5W	J	C06003326P520	1
R766SL	METAL FILM	100	ohm	1/5W	J	C06001016P520	1
R766SR	METAL FILM	100	ohm	1/5W	J	C06001016P520	1
R767SL	METAL FILM	3.3	kohm	1/5W	J	C06003326P520	1
R767SR	METAL FILM	3.3	kohm	1/5W	J	C06003326P520	1
R768SL	CARBON FILM	100	kohm	1/5W	J	C00001046P520	1
R768SR	CARBON FILM	100	kohm	1/5W	J	C00001046P520	1
R769SL	METAL FILM	1	kohm	1/5W	J	C06001026P520	1
R769SR	METAL FILM	1	kohm	1/5W	J	C06001026P520	1
R770L	METAL FILM	2.2	kohm	1/5W	J	C06002226P520	1
R770R	METAL FILM	2.2	kohm	1/5W	J	C06002226P520	1
R771C	METAL FILM	2.2	kohm	1/5W	J	C06002226P520	1
R771W	METAL FILM	2.2	kohm	1/5W	J	C06002226P520	1
R772SL	METAL FILM	2.2	kohm	1/5W	J	C06002226P520	1
R772SR	METAL FILM	2.2	kohm	1/5W	J	C06002226P520	1
R774	METAL FILM	470	ohm	1/5W	J	C06004716P520	1
R775	METAL FILM	4.7	kohm	1/5W	J	C06004726P520	1
R776	METAL FILM	470	ohm	1/5W	J	C06004716P520	1
R777	CARBON FILM	18	kohm	1/5W	J	C00001836P520	1
R778-R780	CARBON FILM	100	kohm	1/5W	J	C00001046P520	3
R781	CARBON FILM	2.2	ohm	1/4W	J	C0002R2063520	1
R782L	CARBON FILM	100	kohm	1/5W	J	C00001046P520	1
R782R	CARBON FILM	100	kohm	1/5W	J	C00001046P520	1
R782C	CARBON FILM	100	kohm	1/5W	J	C00001046P520	1

REF NO.	DESCRIPTION	PARTS NO.	Q'TY
R782W	CARBON FILM 100 kohm 1/5W J	C00001046P520	1
R782SL	CARBON FILM 100 kohm 1/5W J	C00001046P520	1
R782SR	CARBON FILM 100 kohm 1/5W J	C00001046P520	1
R782W	CARBON FILM 100 kohm 1/5W J	C00001046P520	1
R783L	METAL FILM 2.2 kohm 1/5W J	C06002226P520	1
R783R	METAL FILM 2.2 kohm 1/5W J	C06002226P520	1
R784C	METAL FILM 2.2 kohm 1/5W J	C06002226P520	1
R784W	METAL FILM 2.2 kohm 1/5W J	C06002226P520	1
R785SL	METAL FILM 2.2 kohm 1/5W J	C06002226P520	1
R785SR	METAL FILM 2.2 kohm 1/5W J	C06002226P520	1
R786/R787	METAL FILM 4.7 kohm 1/5W J	C06004726P520	2
R788L	METAL FILM 470 ohm 1/5W J	C06004716P520	1
R788R	METAL FILM 470 ohm 1/5W J	C06004716P520	1
R789C	METAL FILM 470 ohm 1/5W J	C06004716P520	1
R789W	METAL FILM 470 ohm 1/5W J	C06004716P520	1
R790SL	METAL FILM 470 ohm 1/5W J	C06004716P520	1
R790SR	METAL FILM 470 ohm 1/5W J	C06004716P520	1
R791	METAL FILM 470 ohm 1/5W J	C06004716P520	1
R792/R793	CARBON FILM 22 kohm 1/5W J	C00002236P520	2
R801	METAL FILM 100 ohm 1/5W J	C06001016P520	1
R802	METAL FILM 560 ohm 1/5W J	C06005616P520	1
R803-R805	METAL FILM 1 kohm 1/5W J	C06001026P520	3
R806	METAL FILM 4.7 kohm 1/5W J	C06004726P520	1
R807	CHIP THICK 150 ohm 1/10W J	C200015160200	1
R808	METAL FILM 2.2 kohm 1/5W J	C06002226P520	1
R809-R812	METAL FILM 1 kohm 1/5W J	C06001026P520	4
R813	CARBON FILM 10 kohm 1/5W J	C00001036P520	1
R814	METAL FILM 1 kohm 1/5W J	C06001026P520	1
R815	METAL FILM 4.7 kohm 1/5W J	C06004726P520	1
R816	METAL FILM 1 kohm 1/5W J	C06001026P520	1
R817	METAL FILM 3.3 kohm 1/5W J	C06003326P520	1
R818/R819	METAL FILM 1 kohm 1/5W J	C06001026P520	2
R820	METAL FILM 1.8 kohm 1/5W J	C06001826P520	1
R821/R822	CARBON FILM 10 kohm 1/5W J	C00001036P520	2
R823	METAL FILM 4.7 kohm 1/5W J	C06004726P520	1
R824	CARBON FILM 100 kohm 1/5W J	C00001046P520	1
R825	METAL FILM 4.7 kohm 1/5W J	C06004726P520	1
R826	METAL FILM 3.9 kohm 1/5W J	C06003926P520	1
R827	CARBON FILM 22 kohm 1/5W J	C00002236P520	1
R828	CHIP THICK 8.2 kohm 1/10W J	C200082260200	1
R829	CARBON FILM 68 kohm 1/5W J	C00006836P520	1
R830	CARBON FILM 27 kohm 1/5W J	C00002736P520	1
R831/R832	CARBON FILM 10 kohm 1/5W J	C00001036P520	2
R833	CARBON FILM 47 kohm 1/5W J	C00004736P520	1
R834	CHIP THICK 120 ohm 1/10W J	C200012160200	1
R835	CARBON FILM 47 kohm 1/5W J	C00004736P520	1
R836	METAL FILM 47 ohm 1/5W J	C06004706P520	1
R837/R838	CARBON FILM 47 kohm 1/5W J	C00004736P520	2
R839/R840	CARBON FILM 10 kohm 1/5W J	C00001036P520	2
R841-R843	CARBON FILM 47 kohm 1/5W J	C00004736P520	3
R844/R845	CARBON FILM 10 kohm 1/5W J	C00001036P520	2
R846	METAL FILM 1 kohm 1/5W J	C06001026P520	1
R847-R856	CARBON FILM 47 kohm 1/5W J	C00004736P520	10
R857	CARBON FILM 10 kohm 1/5W J	C00001036P520	1
R858	METAL FILM 470 ohm 1/5W J	C06004716P520	1
R859/R860	CARBON FILM 47 kohm 1/5W J	C00004736P520	2
R861/R862	METAL FILM 100 kohm 1/5W J	C06001016P520	2
R863/R864	CARBON FILM 22 kohm 1/5W J	C00002236P520	2
R865	METAL FILM 3.3 kohm 1/5W J	C06003326P520	1
R866	CARBON FILM 1 Mohm 1/5W J	C00001056P520	1
R867	CARBON FILM 47 kohm 1/5W J	C00004736P520	1
R868/R869	METAL FILM 47 ohm 1/5W J	C06004706P520	2
R870	CARBON FILM 33 kohm 1/5W J	C00003336P520	1
R871-R876	CARBON FILM 10 kohm 1/5W J	C00001036P520	6
R878-R880	METAL FILM 470 ohm 1/5W J	C06004716P520	3
R881	METAL FILM 82 ohm 1/5W J	C06008206P520	1
R882	METAL FILM 680 ohm 1/5W J	C06006816P520	1
R883	METAL FILM 4.7 kohm 1/5W J	C06004726P520	1
R884	CARBON FILM 10 kohm 1/5W J	C00001036P520	1
R885-R888	CARBON FILM 100 kohm 1/5W J	C00001046P520	4
R889	CARBON FILM 18 kohm 1/5W J	C00001836P520	1
R890-R893	CARBON FILM 100 kohm 1/5W J	C00001046P520	4
R894	CARBON FILM 10 kohm 1/5W J	C00001036P520	1
R895	METAL FILM 100 kohm 1/5W J	C06001016P520	1
R896-R898	CARBON FILM 10 kohm 1/5W J	C00001036P520	3
R899	CHIP THICK 220 kohm 1/10W J	C200022460200	1

MISCELLANEOUS

BPF801	FILTER BPF 2.88MHZ	E440000010010	1
PLR102	MODULE,OPTICAL RCVR PLR102	E944102000010	1
VC101	DIODE VARACTOR KV1851	K080185100010	1
X801	X-TAL, 18.432MHZ	E800184320810	1
X802	X-TAL, 24.576MHZ	E800245760810	1
X803	RESONATOR CST4.19MGW-TF01	E830419000060	1

REF NO.	DESCRIPTION	PARTS NO.	Q'TY
▶	**FRONT PCB ASS'Y (PCB3) INCLUDES THE FOLLOWING BOARDS.**		
	① ASS'Y PCB 3-1 (TONE&CBASS)		
	② ASS'Y PCB 3-2 (HP/SPK SW)		
	③ ASS'Y PCB 3-3 (VIDEO FRONT)		
	④ ASS'Y PCB 3-4 (POWER SW TACT)		
	⑤ ASS'Y PCB 3-5 (VOL. ENC)		
	⑥ ASS'Y PCB 3-6 (SW PUSH)		
	⑦ ASS'Y PCB 3-7 (CBASS SW)		
▶	**INPUT PCB ASS'Y (PCB4) INCLUDES THE FOLLOWING BOARDS.**		
	① ASS'Y PCB 4-1 (INPUT&VIDEO)		
	② ASS'Y PCB 4-2 (SPKR)		

SCHEMATIC DIAGRAM

4001 007 400

LEFT SURROUND CH.

LEFT CH.

CENTER CH.

RIGHT SURROUND CH.

RIGHT CH.

FROM PROCESSOR B.D

TO MAIN B.D

L/R DC PROTECTION

I-PROTECTION

00045

SCHEMAT

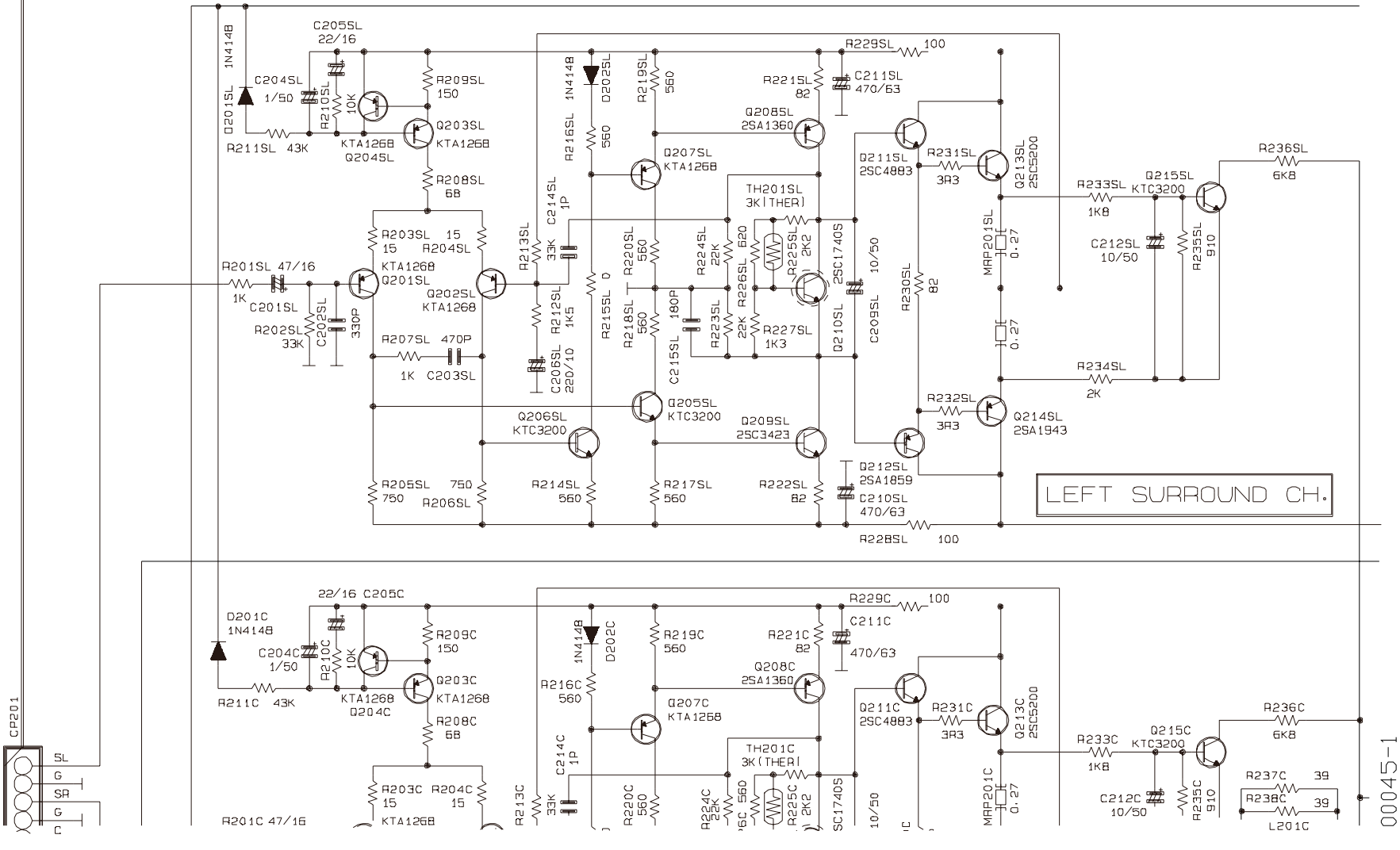

TIC DIAGRAM

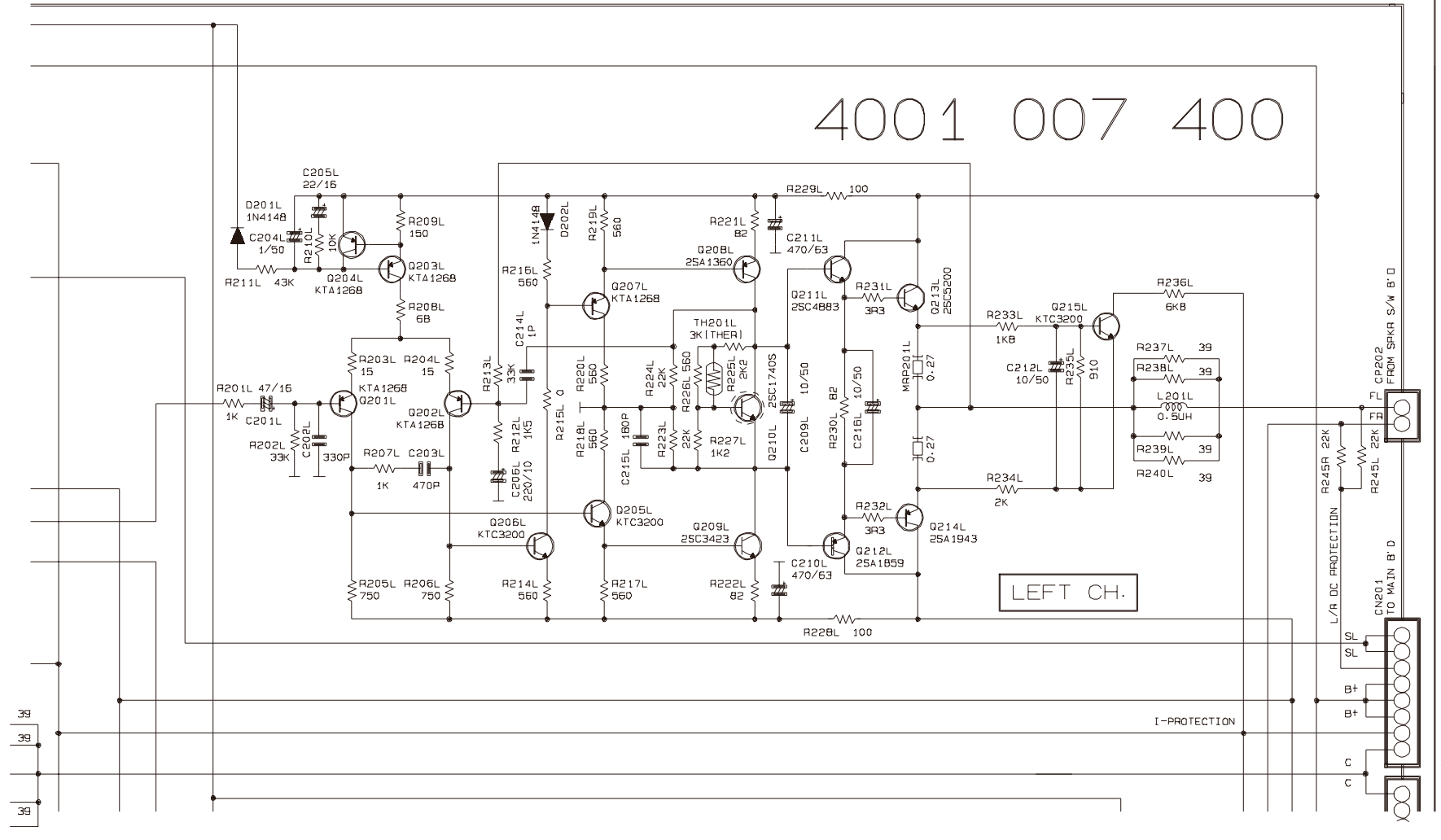
4001 007 400
LEFT CH.
L/R DC PROTECTION
I-PROTECTION
CP202
FROM SPKR S/W B'D
CN201
TO MAIN B'D
00045-2

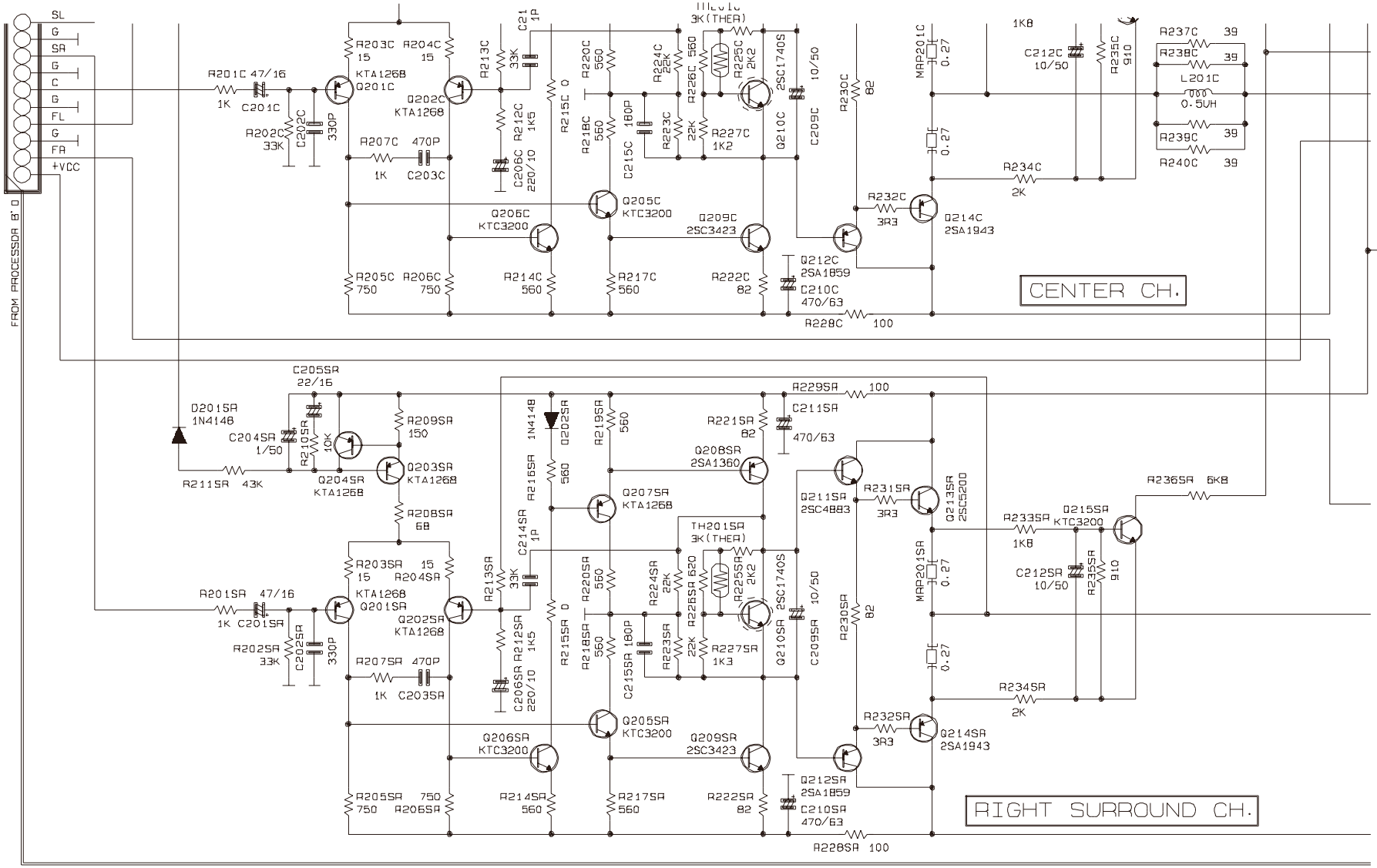
FROM PROCESSOR B'D
SL
G
SR
G
C
G
FL
G
FR
+VCC
CENTER CH.
RIGHT SURROUND CH.
00045-3

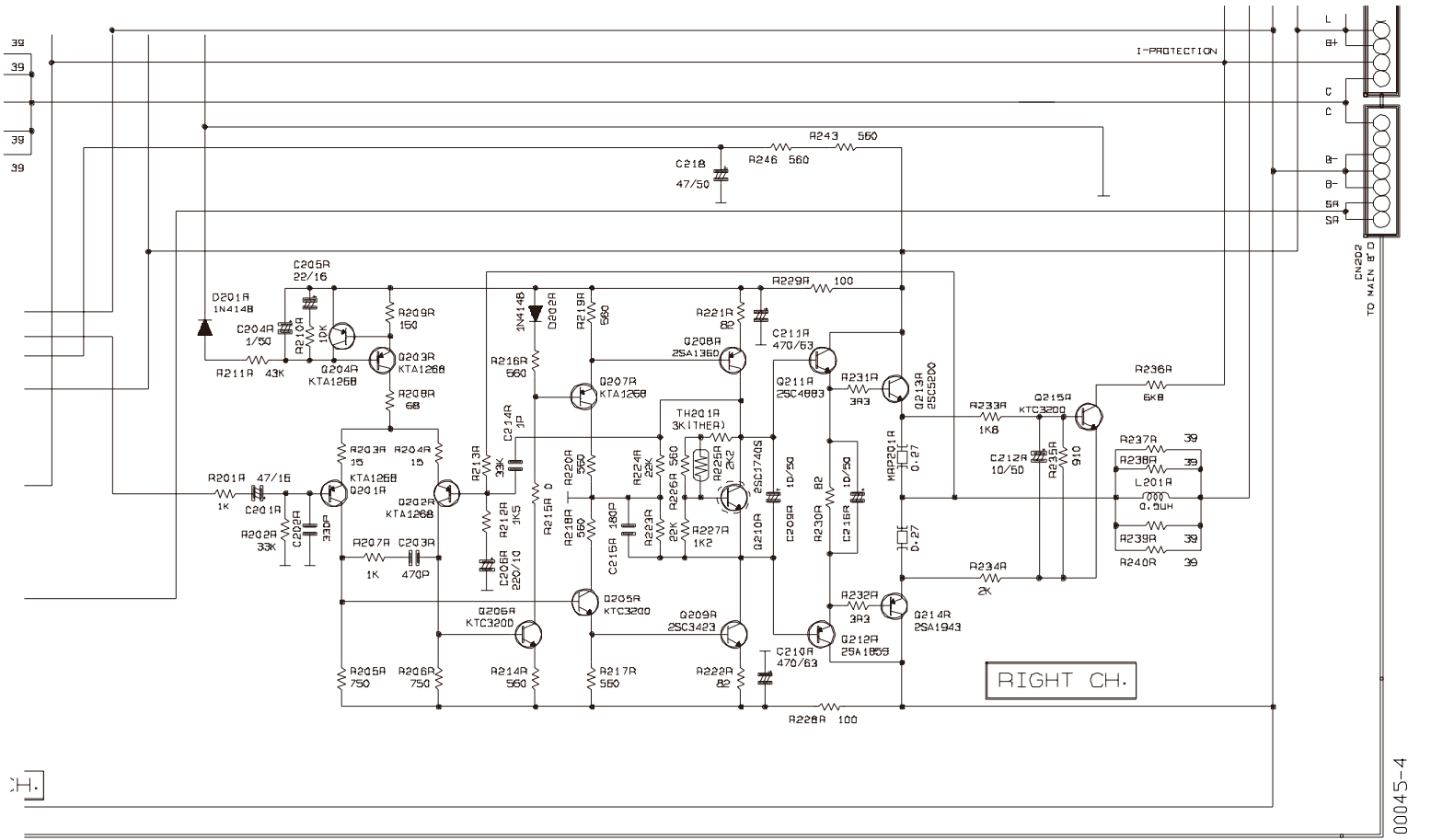
I-PROTECTION
CN202
TO MAIN P.C.B
RIGHT CH.
00045-4

SCHEMATIC DIAGRAM

POWER SW TACT BD
4001008440

SW PUSH BD
4001008450

CBASS SW B' D
4001008460

HP/SPK SW B' D
4001008420

FRONT B' D
4001008400

TONE & CBASS B' D
4001008470

VIDEO FRONT B' D
4001007810

VOL.ENC B' D
4001008430

00047

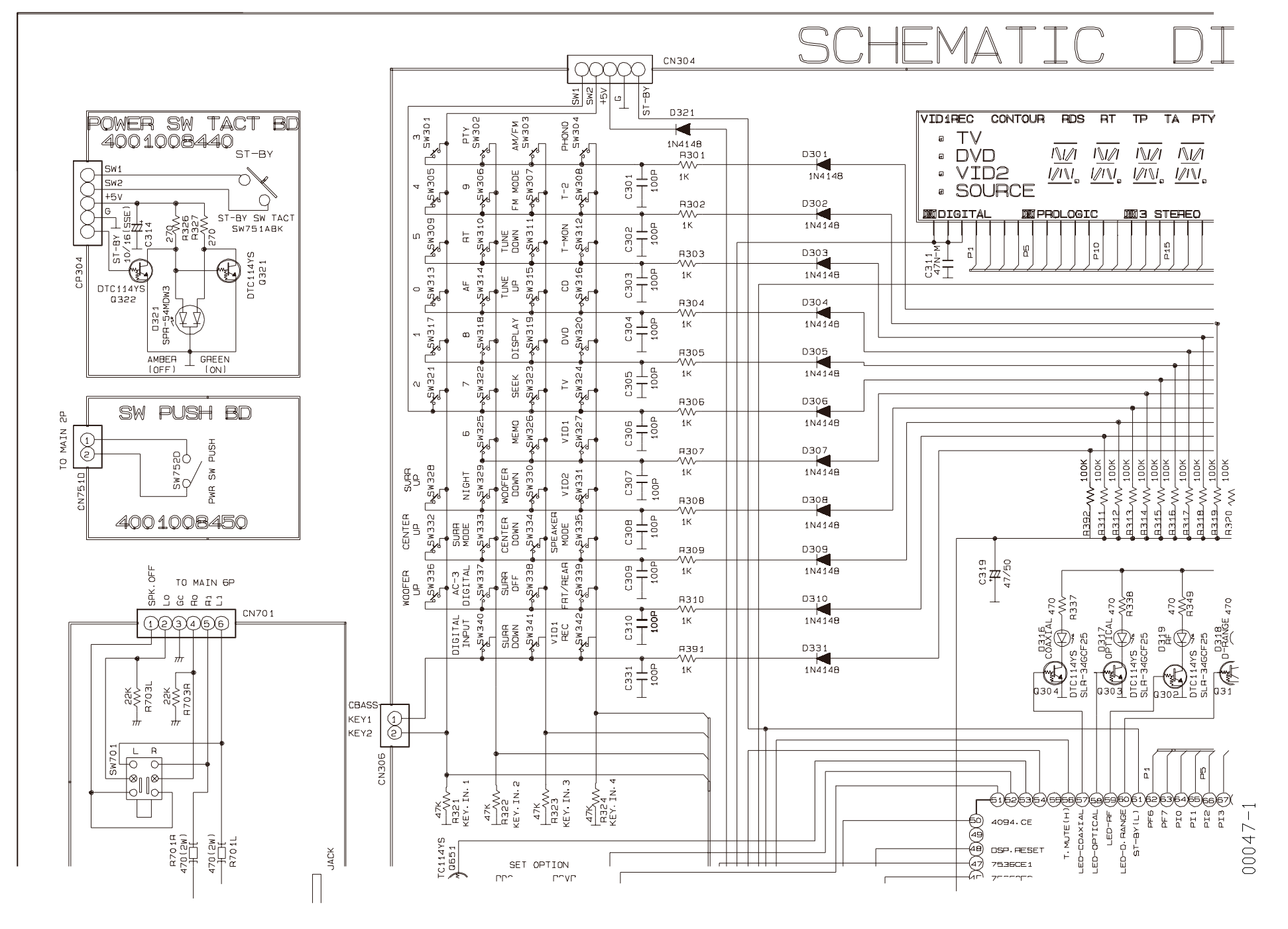
SCHEMATIC DI
POWER SW TACT BD
4001008440
ST-BY
SW1
SW2
+5V
G
ST-BY SW TACT
SW751ABK
CP304
ST-BY
10/16(SSE)
C314
270
R326
R327
270
DTC114YS
Q322
DTC114YS
Q321
D321
SPR-54MDW3
AMBER
(OFF)
GREEN
(ON)
SW PUSH BD
TO MAIN 2P
CN7510
SW752D
PWR SW PUSH
4001008450
TO MAIN 6P
SPK.OFF
Lo
Gc
Ro
Ri
Li
CN701
22K
R703L
22K
R703R
SW701
R701R
470(2W)
470(2W)
R701L
JACK
CBASS
KEY1
KEY2
CN306
CN304
SW1
SW2
+5V
G
ST-BY
D321
1N4148
SW301
PTY
SW302
AM/FM
SW303
PHONO
SW304
SW305
SW306
SW307
SW308
SW309
SW310
SW311
SW312
SW313
SW314
SW315
SW316
SW317
SW318
SW319
SW320
SW321
SW322
SW323
SW324
SW325
SW326
SW327
SW328
SW329
SW330
SW331
SW332
SW333
SW334
SW335
SW336
SW337
SW338
SW339
SW340
SW341
SW342
SURR UP
NIGHT
WOOFER DOWN
VID2
CENTER UP
SURR MODE
CENTER DOWN
SPEAKER MODE
WOOFER UP
AC-3 DIGITAL
SURR OFF
FRT/REAR
DIGITAL INPUT
SURR DOWN
VID1 REC
R301
R302
R303
R304
R305
R306
R307
R308
R309
R310
R391
1K
C301
C302
C303
C304
C305
C306
C307
C308
C309
C310
C331
100P
D301
D302
D303
D304
D305
D306
D307
D308
D309
D310
D331
1N4148
VID1REC CONTOUR RDS RT TP TA PTY
TV
DVD
VID2
SOURCE
DIGITAL
PROLOGIC
3 STEREO
C311
47N-M
P1
P5
P10
P15
R392
R311
R312
R313
R314
R315
R316
R317
R318
R319
R320
100K
C319
47/50
D316
COAXIAL
R337
470
Q304
DTC114YS
SLR-346CF25
D317
OPTICAL
R338
470
Q303
D319
R349
470
Q302
D318
ORANGE
470
Q31
47K
R321
KEY. IN. 1
47K
R322
KEY. IN. 2
47K
R323
KEY. IN. 3
47K
R324
KEY. IN. 4
TC114YS
Q551
SET OPTION
4094.CE
DSP.RESET
7536CE1
T.MUTE(H)
LED-COAXIAL
LED-OPTICAL
LED-RF
LED-D.RANGE
ST-BY(L)
PF6
PF7
PI0
PI1
PI2
PI3
P1
P5
00047-1

C DIAGRAM

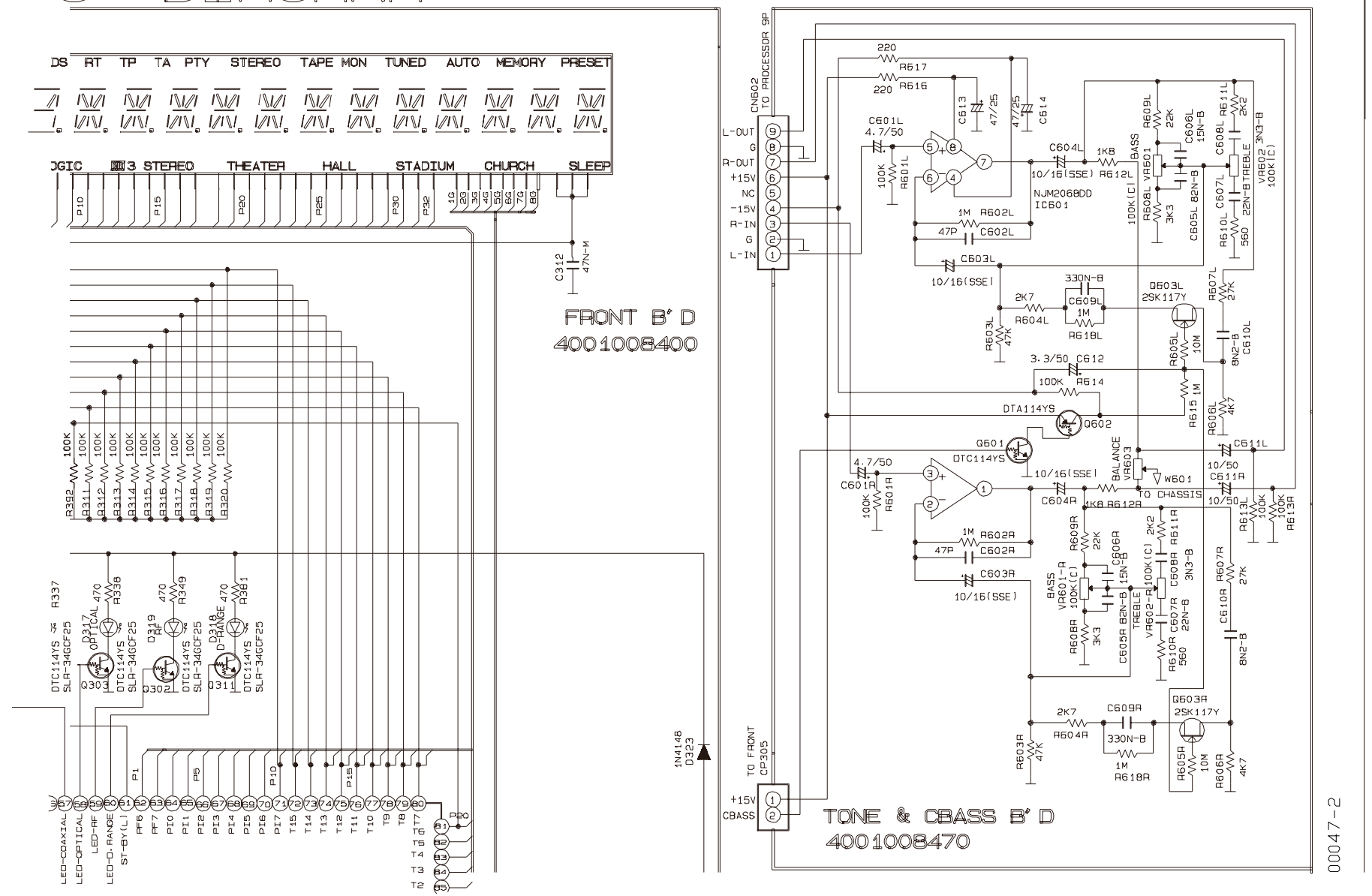

00047-2

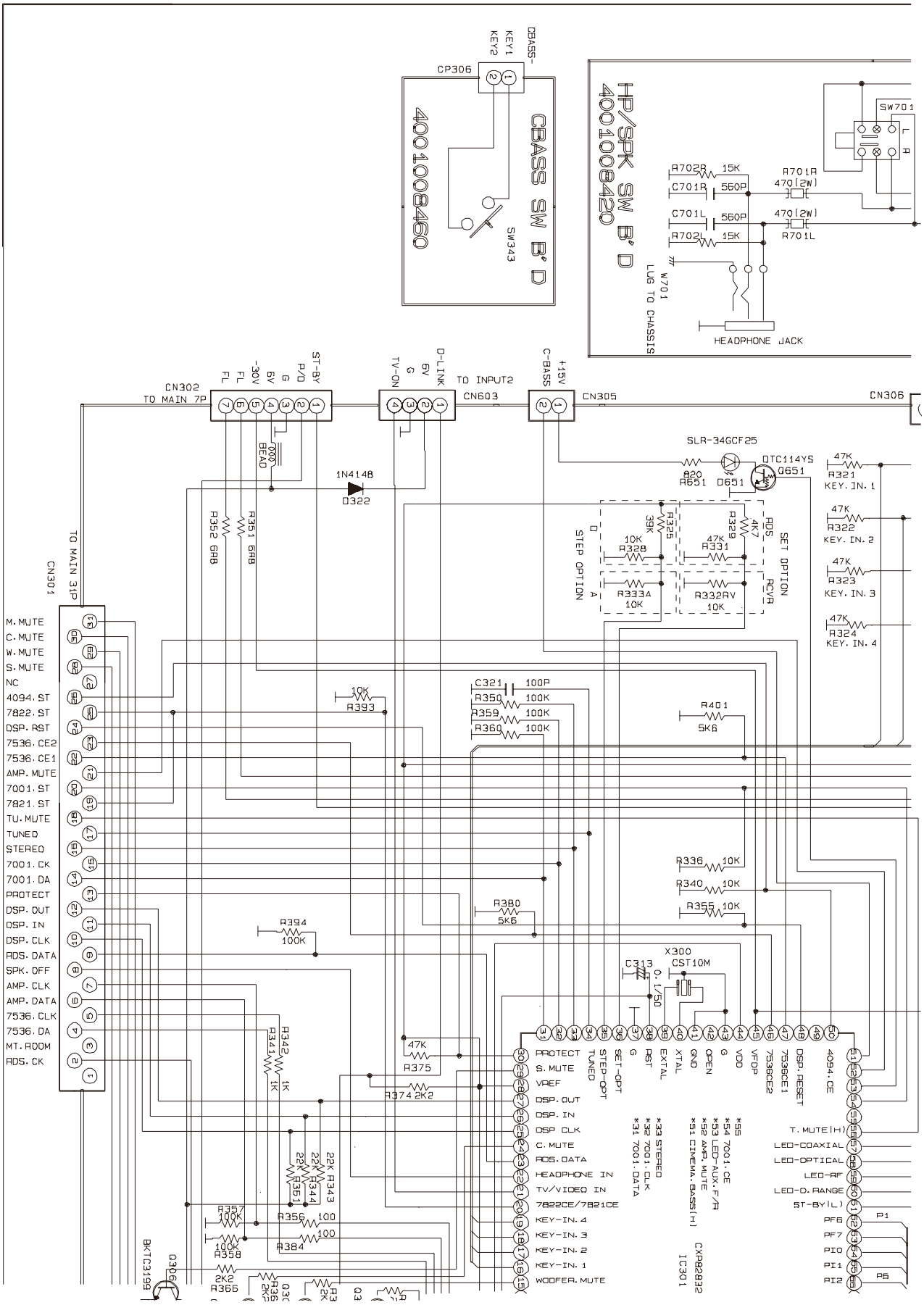
CBASS SW B'D
4001008460
CP306
KEY1
KEY2
CBASS-
SW343
HP/SPK SW B'D
4001008420
SW701
L
R
R702R 15K
C701R 560P
C701L 560P
R702L 15K
R701R 470(2W)
R701L 470(2W)
W701
LUG TO CHASSIS
HEADPHONE JACK
CN302
TO MAIN 7P
FL
FL
-30V
6V
G
P/O
ST-BY
TV-ON
G
6V
D-LINK
TO INPUT2
CN603
C-BASS
+15V
CN305
CN306
SLR-34GCF25
A20
D651
DTC114YS
Q651
1N414B
D322
BEAD
R352 6R8
R351 6R8
R325 39K
R328 10K
R329 4K7
R331 47K
R333A 10K
R332RV 10K
RDS
SET OPTION
RCVR
STEP OPTION
A
D
R321 47K
KEY. IN. 1
R322 47K
KEY. IN. 2
R323 47K
KEY. IN. 3
R324 47K
KEY. IN. 4
CN301
TO MAIN 31P
M.MUTE
C.MUTE
W.MUTE
S.MUTE
NC
4094.ST
7822.ST
DSP.RST
7536.CE2
7536.CE1
AMP.MUTE
7001.ST
7821.ST
TU.MUTE
TUNED
STEREO
7001.CK
7001.DA
PROTECT
DSP.OUT
DSP.IN
DSP.CLK
RDS.DATA
SPK.OFF
AMP.CLK
AMP.DATA
7536.CLK
7536.DA
MT.ROOM
RDS.CK
R393 10K
C321 100P
R350 100K
R359 100K
R360 100K
R401 5K6
R336 10K
R340 10K
R355 10K
R380 5K6
R394 100K
X300
CST10M
C313 0.1/50
R342 1K
R341 1K
47K
R375
R374 2K2
R357 10K
R356 100
R358 100K
R384 100
R343 22K
R344 22K
R361 22K
Q306
BKTC3159
R366 2K2
PROTECT
S.MUTE
VREF
DSP.OUT
DSP.IN
DSP CLK
C.MUTE
RDS.DATA
HEADPHONE IN
TV/VIDEO IN
7822CE/7821CE
KEY-IN.4
KEY-IN.3
KEY-IN.2
KEY-IN.1
WOOFER.MUTE
TUNED
STEP-OPT
SET-OPT
G
PST
XTAL
GND
OPEN
G
VDD
VFDP
7536CE2
7536CE1
DSP. RESET
4094.CE
*33 STEREO
*32 7001.CLK
*31 7001.DATA
*55
*54 7001.CE
*53 LED-AUX.F/R
*52 AMP.MUTE
*51 CINEMA.BASS(H)
CXP82832
IC301
T.MUTE(H)
LED-COAXIAL
LED-OPTICAL
LED-RF
LED-D.RANGE
ST-BY(L)
PF6
PF7
PI0
PI1
PI2
P1
P5

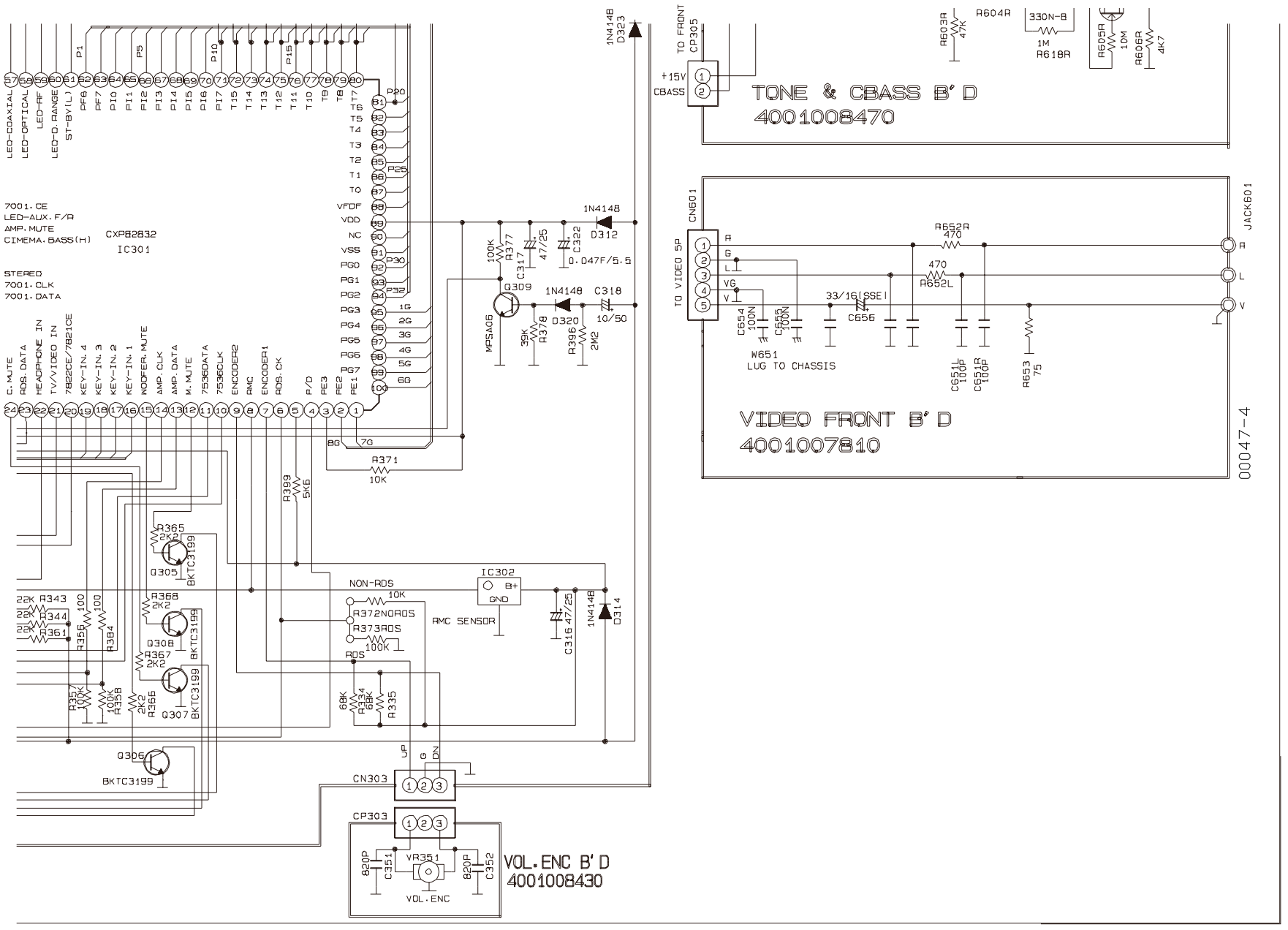
TONE & CBASS B'D
4001008470
VIDEO FRONT B'D
4001007810
VOL.ENC B'D
4001008430
IC301
CXP82832
7001.CE
LED-AUX.F/R
AMP.MUTE
CIMEMA.BASS(H)
STEREO
7001.CLK
7001.DATA
IC302
NON-RDS
AMC SENSOR
RDS
TO FRONT CP305
+15V
CBASS
TO VIDEO 5P
CN601
JACK601
W651
LUG TO CHASSIS
CN303
CP303
VOL.ENC
00047-4

SCHEMATIC DIAGRAM

INPUT B'D
4004002100

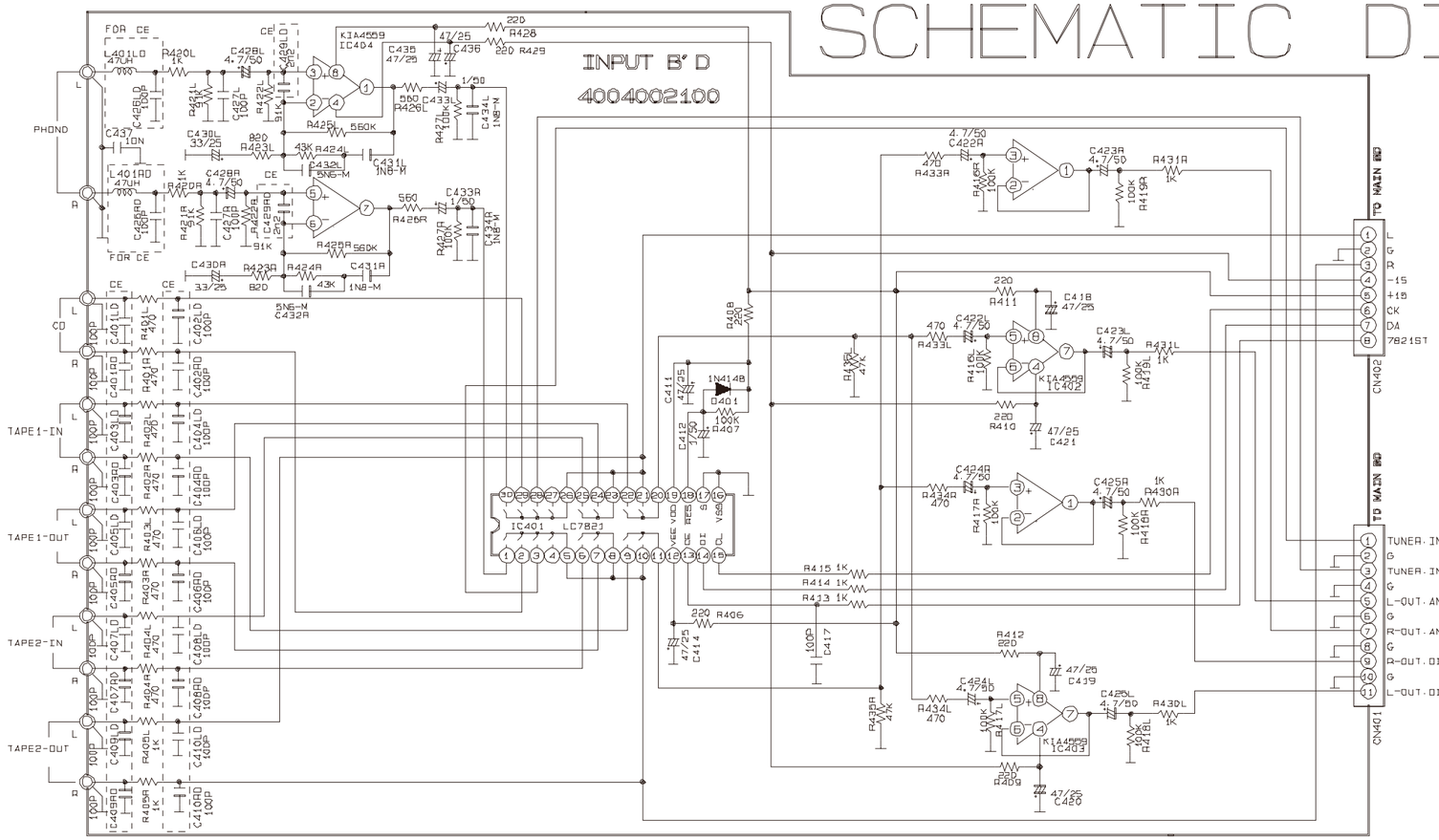

INPUT & VIDEO B'D
4004002110

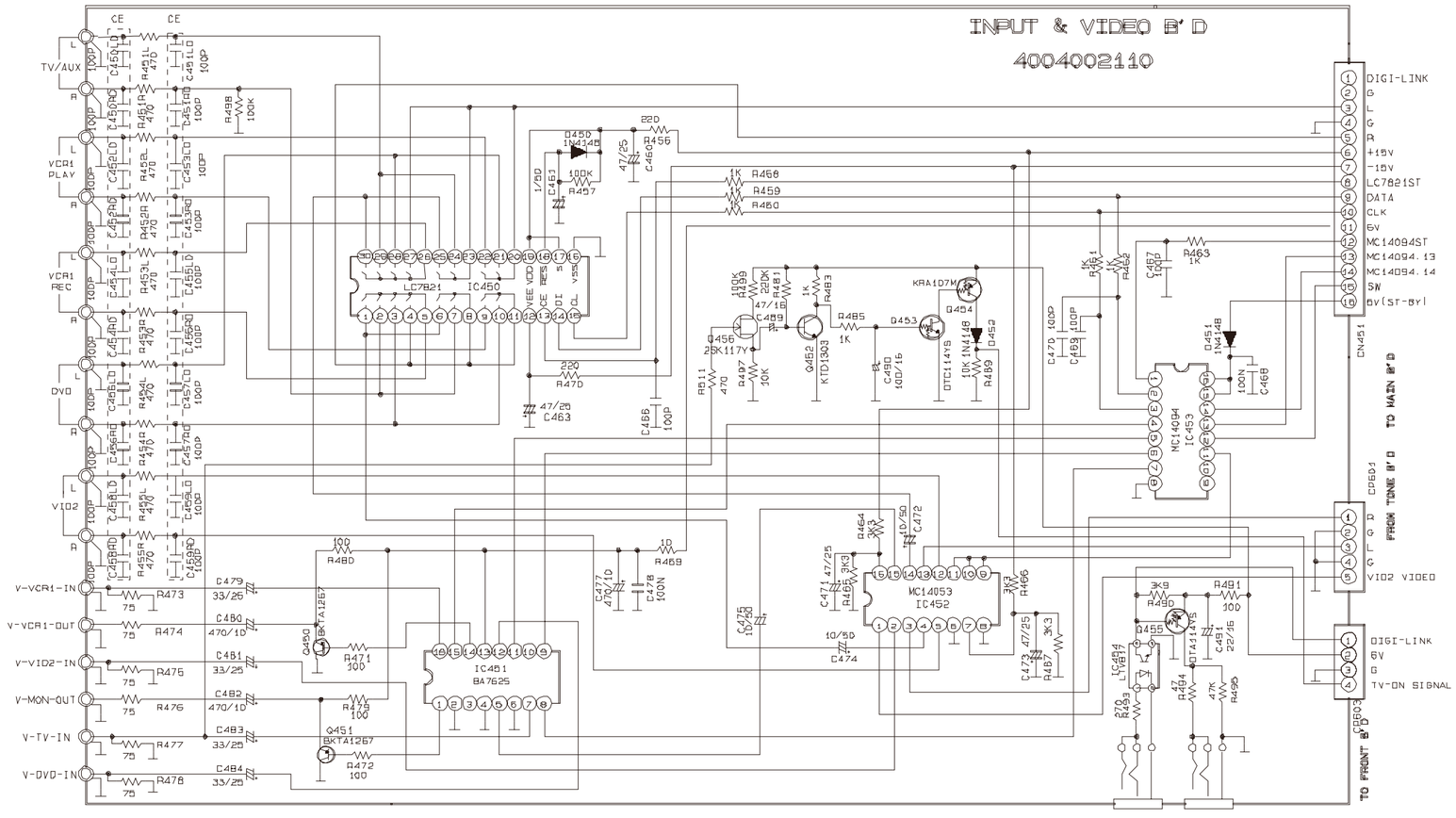

SPKR B'D
4004002120

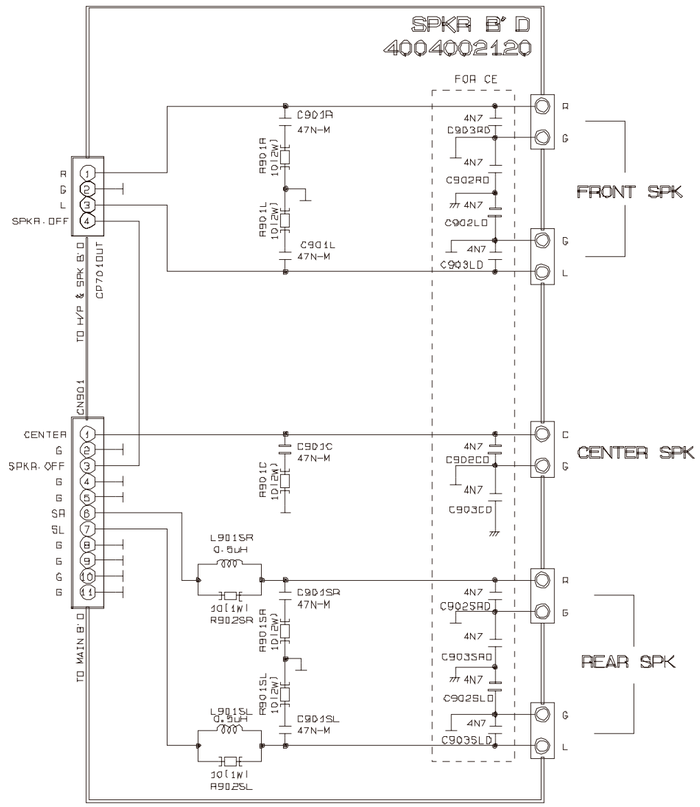

00048

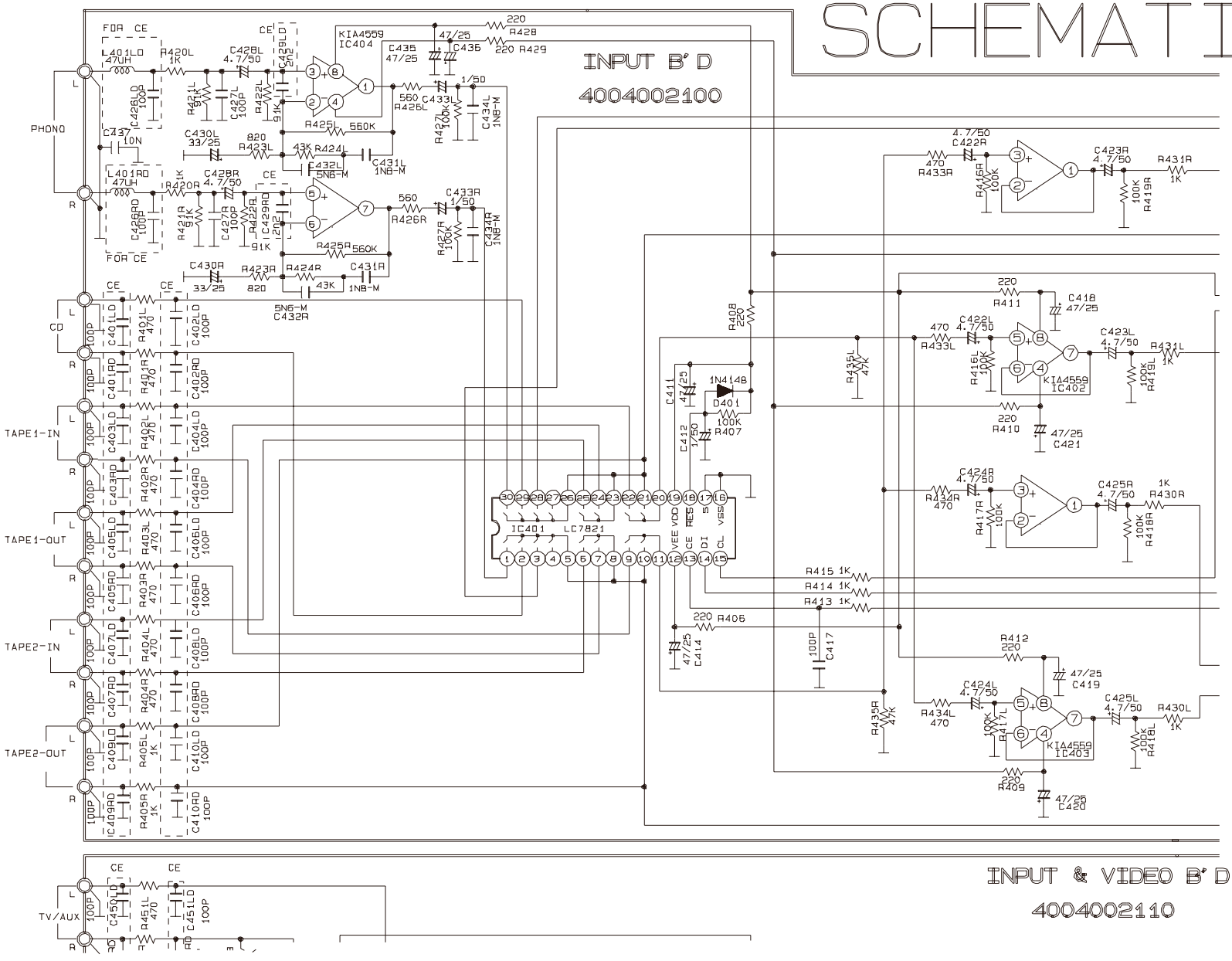
SCHEMATI
INPUT B' D
4004002100
INPUT & VIDEO B' D
4004002110
PHONO
TAPE1-IN
TAPE1-OUT
TAPE2-IN
TAPE2-OUT
TV/AUX
CD
IC401 LC7821
KIA4559 IC402
KIA4559 IC403
KIA4559 IC404
1N4148 D401
00048-1

ATIC DIAGRAM

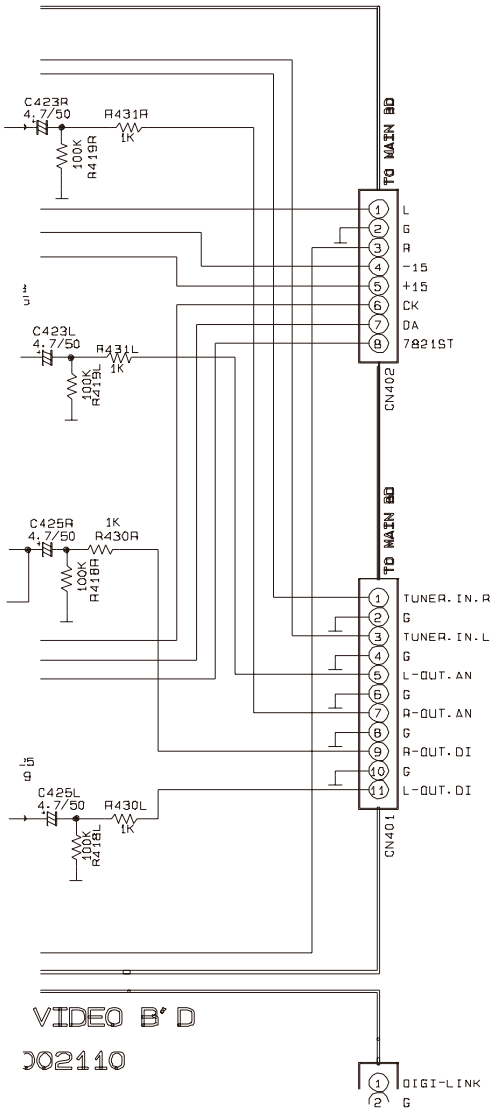

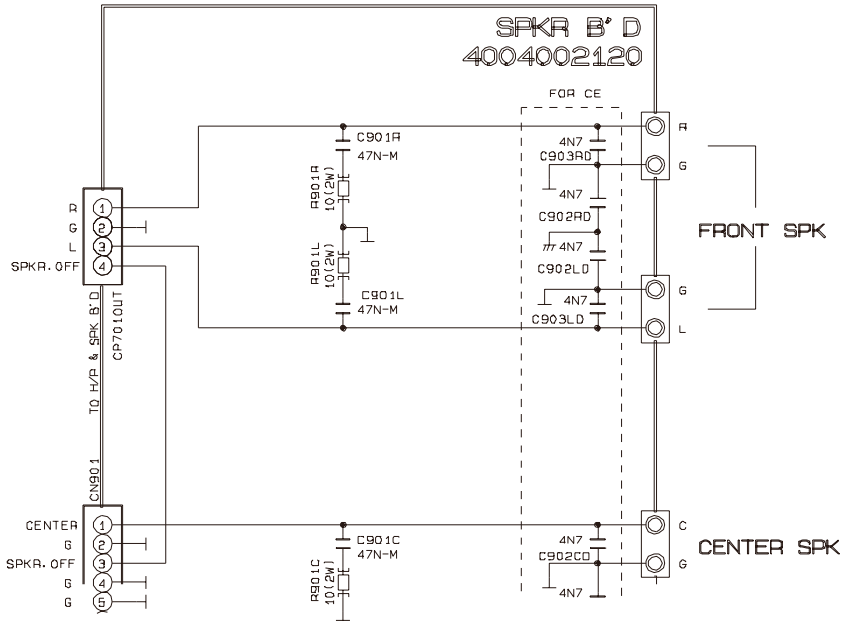

00048-2

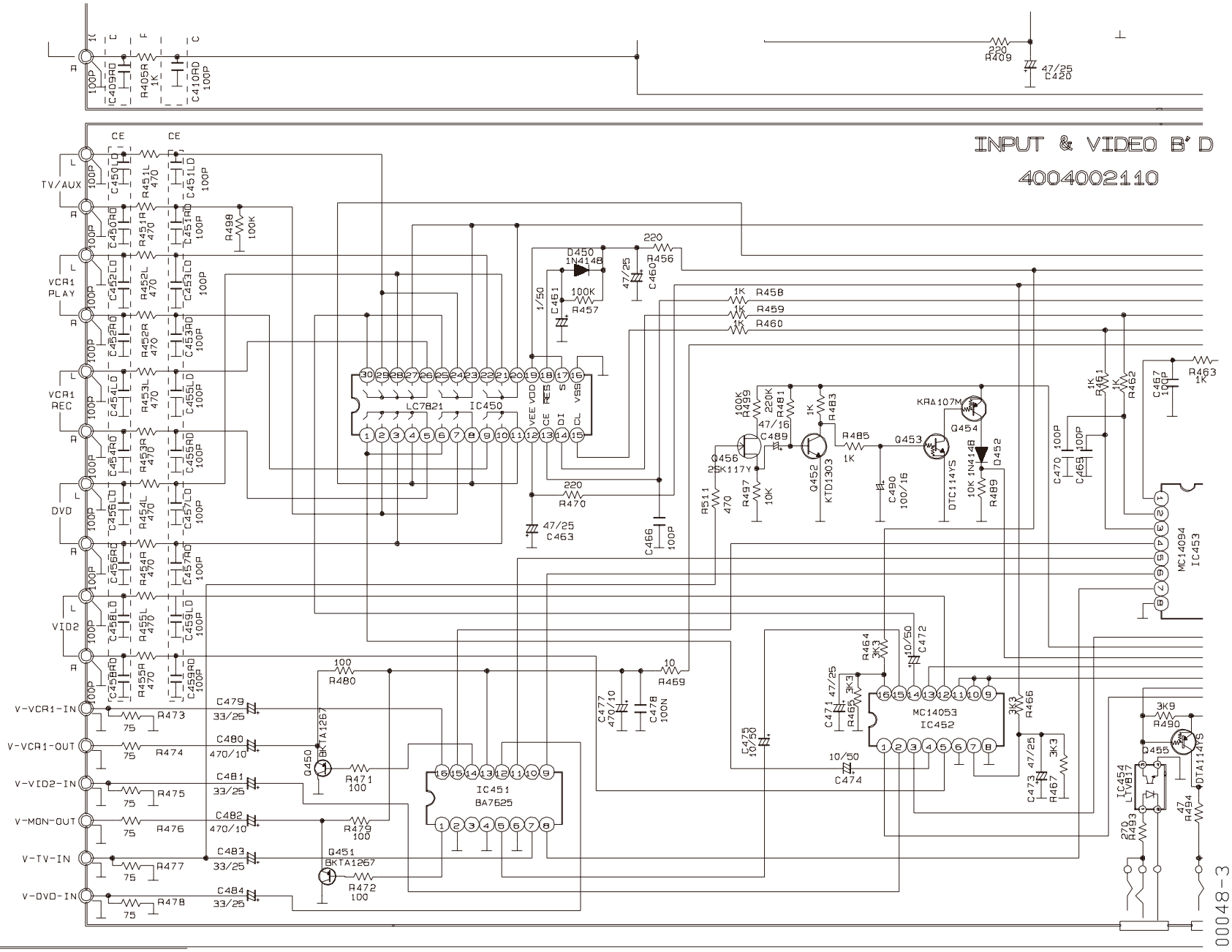
INPUT & VIDEO B'D
4004002110
TV/AUX
VCR1 PLAY
VCR1 REC
DVD
VID2
V-VCR1-IN
V-VCR1-OUT
V-VID2-IN
V-MON-OUT
V-TV-IN
V-DVD-IN
IC450 LC7821
IC451 BA7525
IC452 MC14053
IC453 MC14094
IC454 LTV817
D450 1N4148
D451 BKTA1267
D452 1N4148
D455 DTA114YS
Q450 BKTA1267
Q451 BKTA1267
Q452 KTD1303
Q453 DTC114YS
Q454 KRA107M
Q456 2SK117Y
00048-3

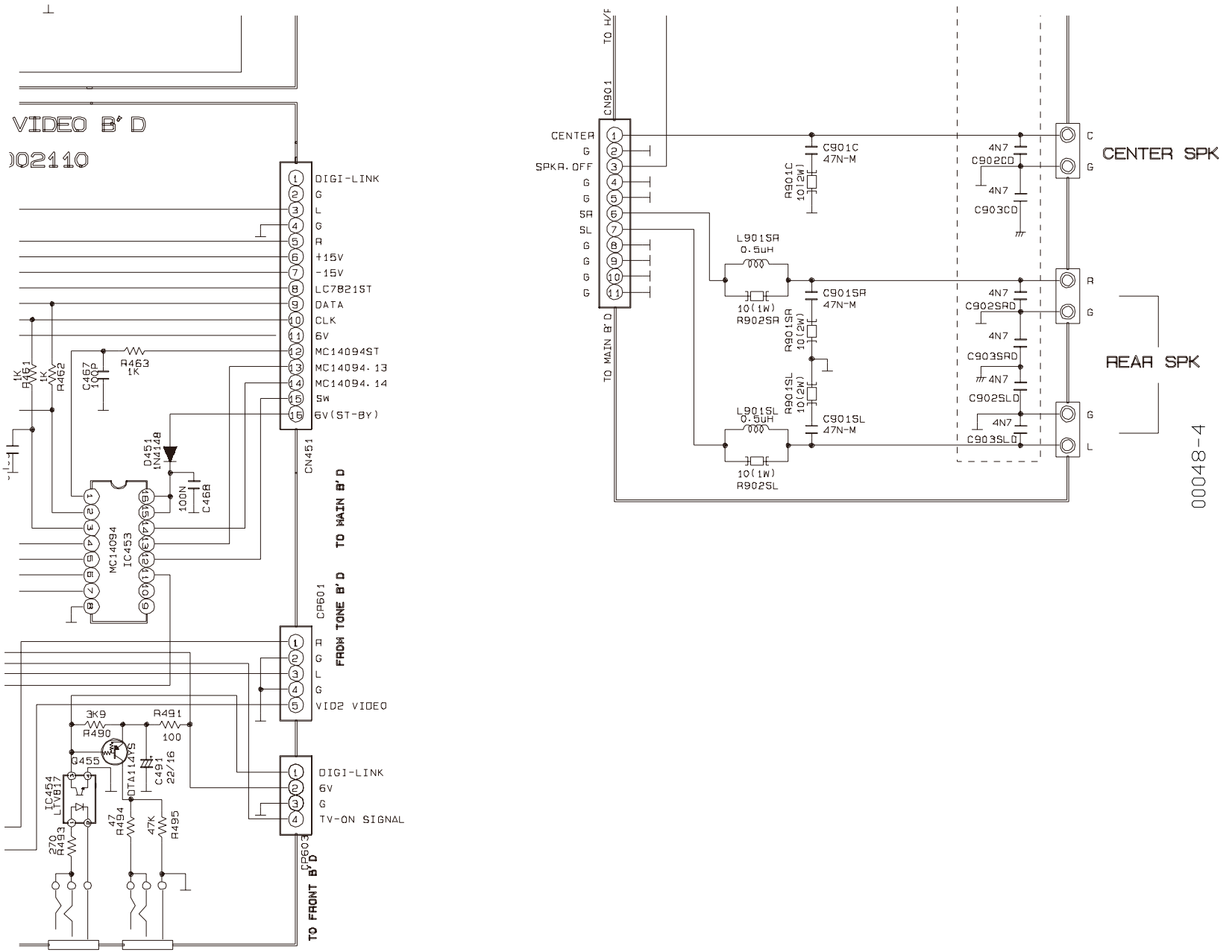
VIDEO B'D
002110
CN451
DIGI-LINK
G
L
G
R
+15V
-15V
LC78215T
DATA
CLK
6V
MC14094ST
MC14094.13
MC14094.14
SW
6V(ST-BY)
R463
1K
C467
100P
R461
1K
R462
D451
1N4148
100N
C468
MC14094
IC453
FROM TONE B'D
CP601
G
R
L
G
VID2 VIDEO
TO MAIN B'D
3K9
R490
R491
100
Q455
DTA114YS
C491
22/16
IC454
LTV817
47
R494
47K
R495
270
R493
DIGI-LINK
6V
G
TV-ON SIGNAL
CP603
TO FRONT B'D
TO H/F
CN901
CENTER
G
SPKR.OFF
G
G
SR
SL
G
G
G
G
TO MAIN B'D
C901C
47N-M
R901C
1012W
L901SR
0.5uH
10(1W)
R902SR
C901SR
47N-M
R901SR
1012W
R901SL
1012W
L901SL
0.5uH
10(1W)
R902SL
C901SL
47N-M
4N7
C902CD
4N7
C903CD
C
G
CENTER SPK
4N7
C902SRD
4N7
C903SRD
4N7
C902SLD
4N7
C903SLD
R
G
G
L
REAR SPK
00048-4

SCHEMATIC DIAGRAM

MAIN B'D
400 100 7300

	F101	F102	F103
USA/CANADA	S8BA 250V		SB315MA 125V
KOREA	N8A 250V		NB315MA 250V
EUR/MULTI	T5AL 250V	T2AL 250V	T315MAL 250V

	F104 F105	F016 F107
USA/CANADA	SB1A 125V	SB1.5A 125V
KOREA	NB1A 250V	NB2A 250V
EUR/MULTI	T1AL 250V	T1.6AL 250V

00049

SCHEMATIC

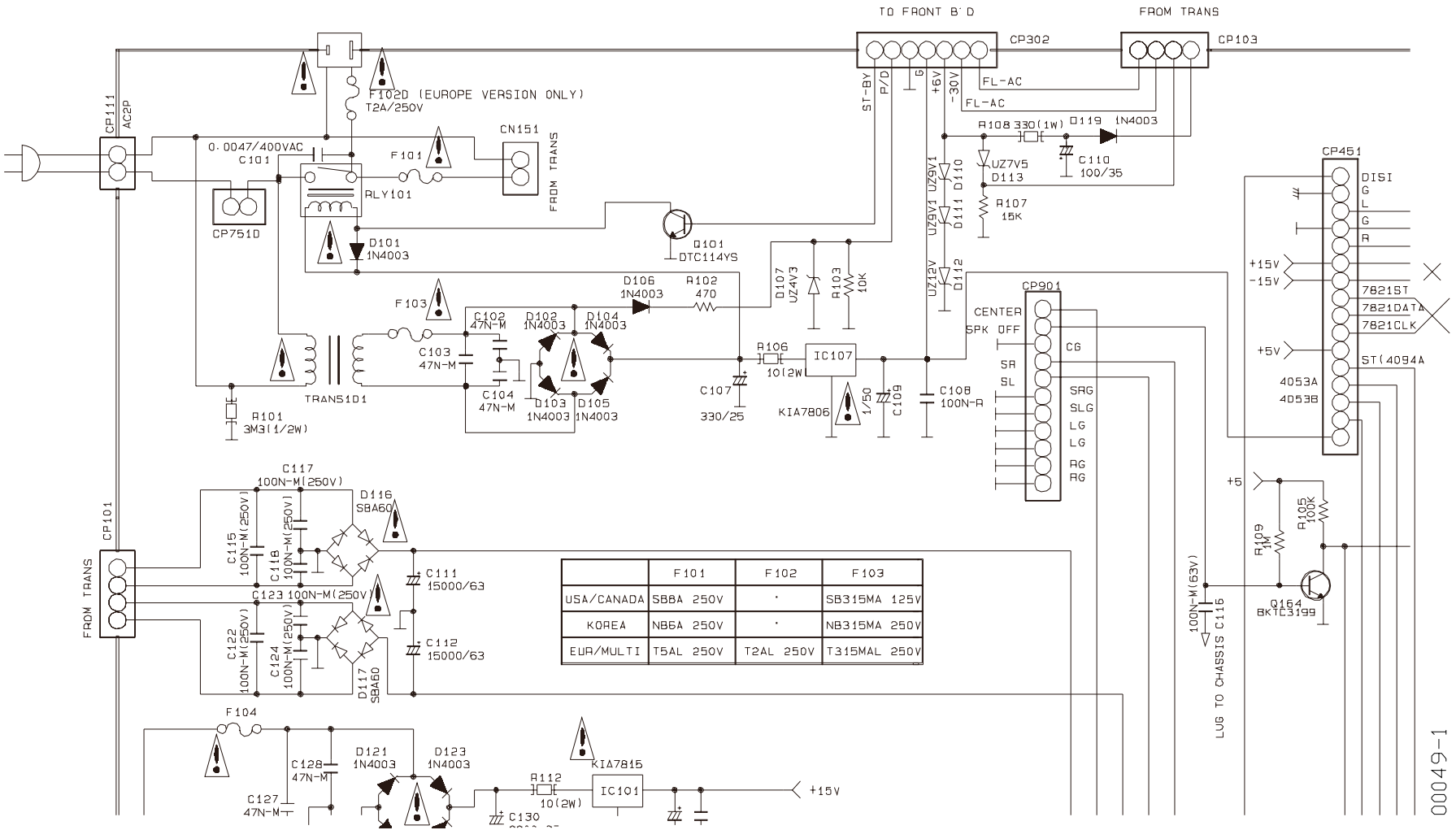

	F101	F102	F103
USA/CANADA	SB8A 250V	·	SB315MA 125V
KOREA	NB6A 250V	·	NB315MA 250V
EUR/MULTI	T5AL 250V	T2AL 250V	T315MAL 250V

00049-1

ATIC DIAGRAM

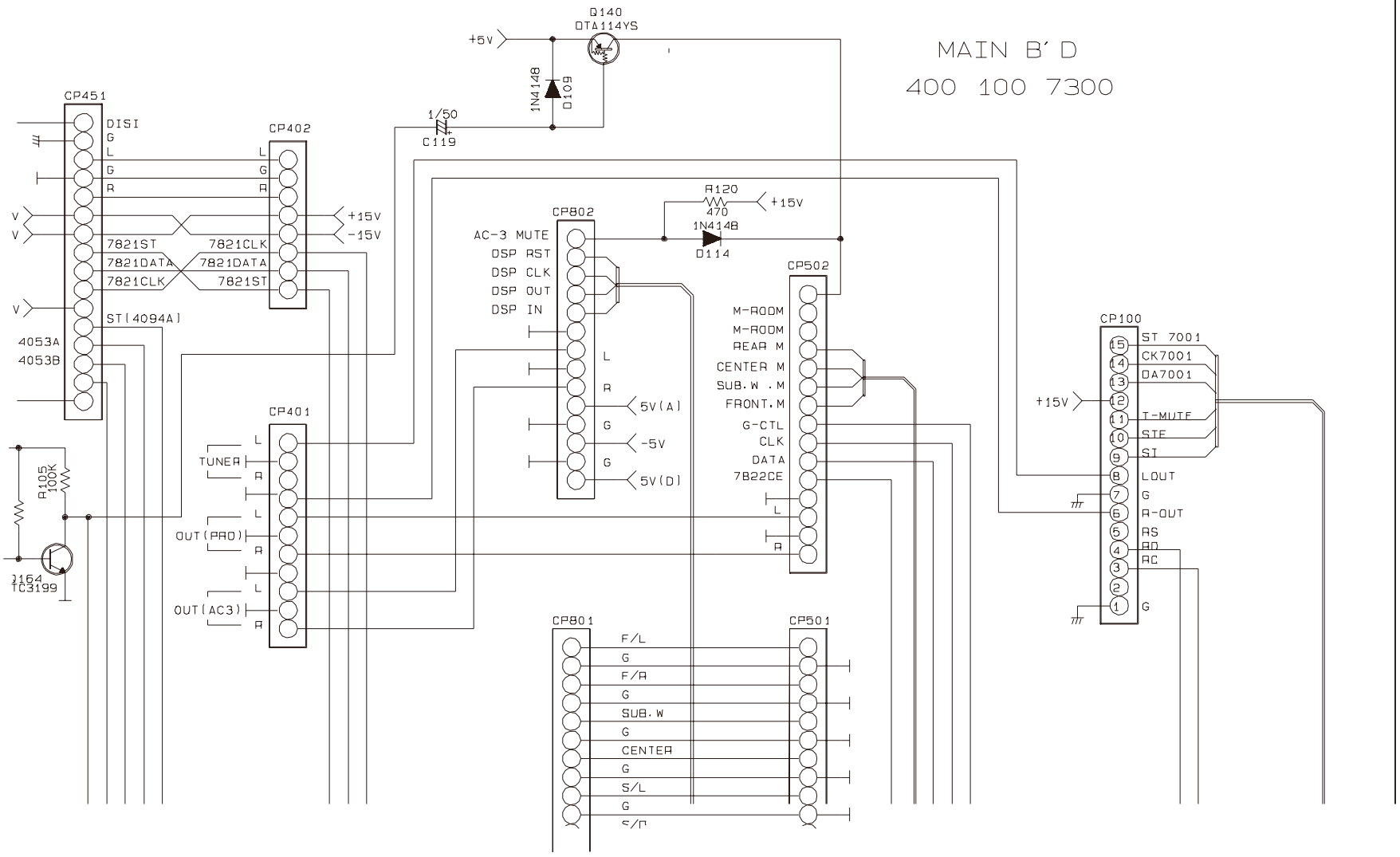

00049-2

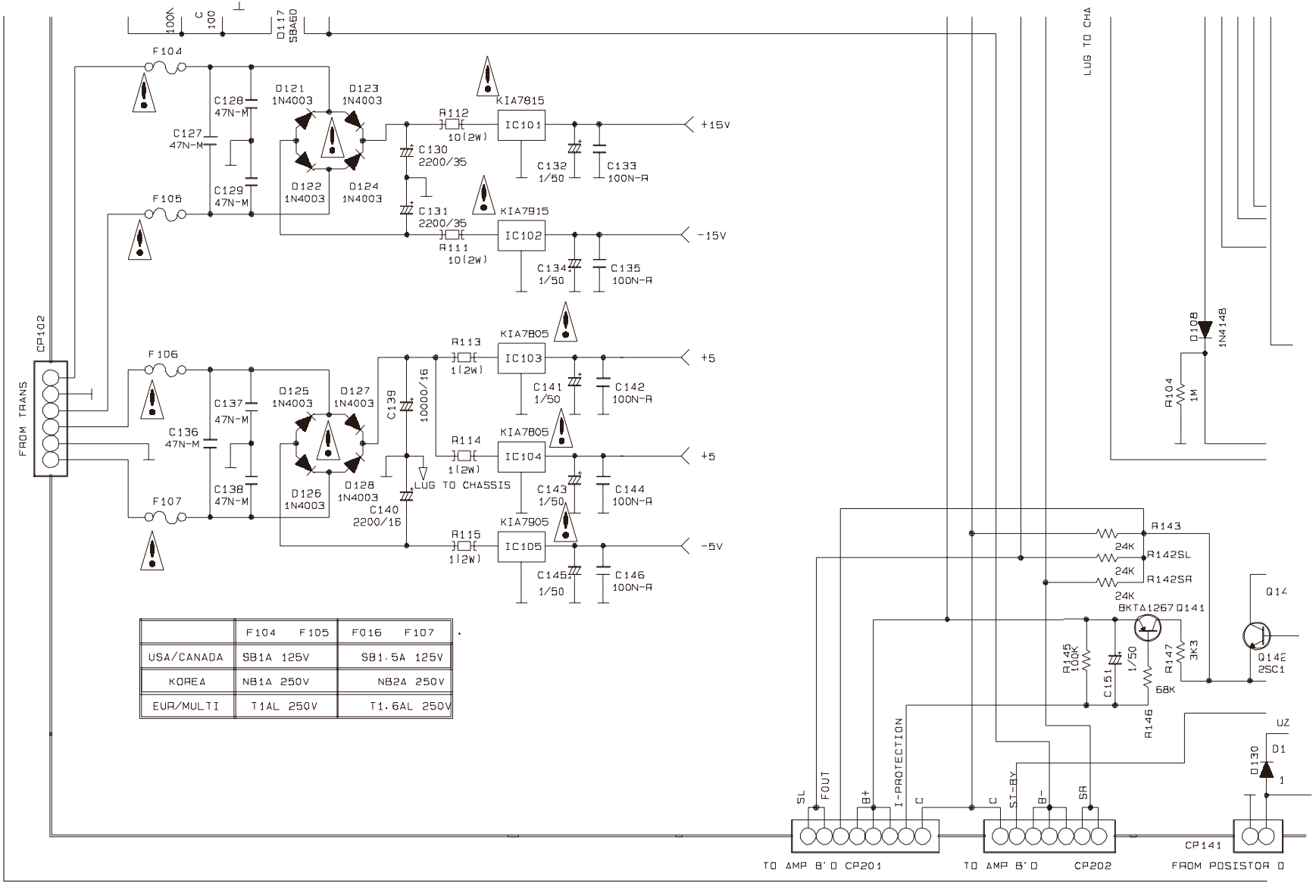

	F104 F105	F016 F107
USA/CANADA	SB1A 125V	SB1.5A 125V
KOREA	NB1A 250V	NB2A 250V
EUR/MULTI	T1AL 250V	T1.6AL 250V

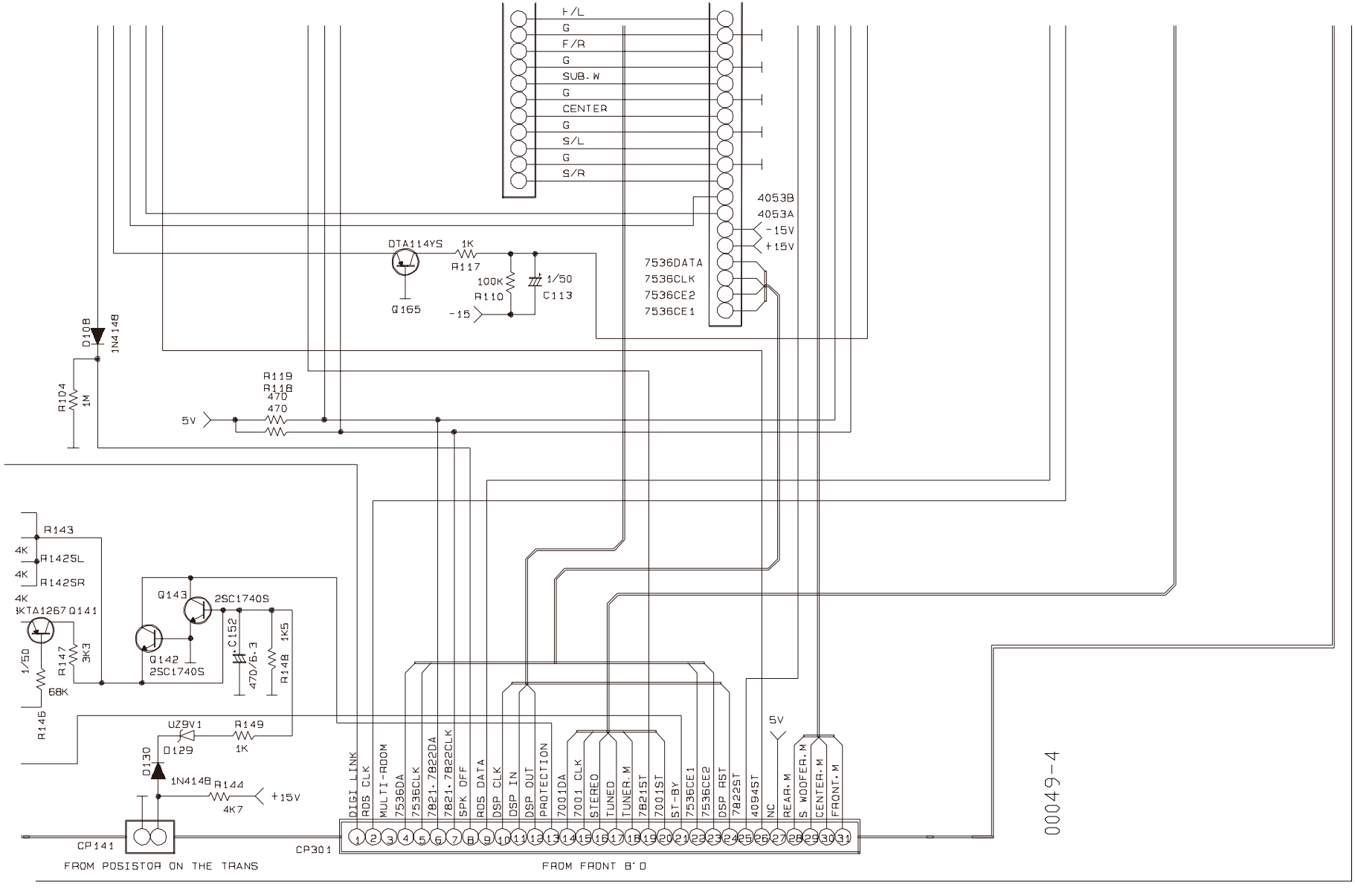
F/L
G
F/R
G
SUB.W
G
CENTER
G
S/L
G
S/R
4053B
4053A
-15V
+15V
7536DATA
7536CLK
7536CE2
7536CE1
DTA114YS
1K
R117
100K
R110
1/50
C113
-15
Q165
D10B
1N4148
R104
1M
R119
R118
470
470
5V
R143
4K
R142SL
4K
R142SR
4K
KTA1267 Q141
Q143
2SC1740S
Q142
2SC1740S
C152
470/6.3
R148
1K5
R147
3K3
1/50
68K
R145
UZ9V1
D129
R149
1K
D130
1N4148
R144
4K7
+15V
CP141
FROM POSISTOR ON THE TRANS
CP301
FROM FRONT B'D
DIGI LINK
RDS CLK
MULTI-ROOM
7536DA
7536CLK
7821-7822DA
7821-7822CLK
SPK OFF
RDS DATA
DSP CLK
DSP IN
DSP OUT
PROTECTION
7001DA
7001 CLK
STEREO
TUNED
TUNER.M
7821ST
7001ST
ST-BY
7536CE1
7536CE2
DSP RST
7822ST
4094ST
NC
5V
REAR.M
S.WOOFER.M
CENTER.M
FRONT.M
1 2 3 4 5 6 7 8 9 10 11 12 13 14 15 16 17 18 19 20 21 22 23 24 25 26 27 28 29 30 31
00049-4

SCHEMATIC DIAGRAM

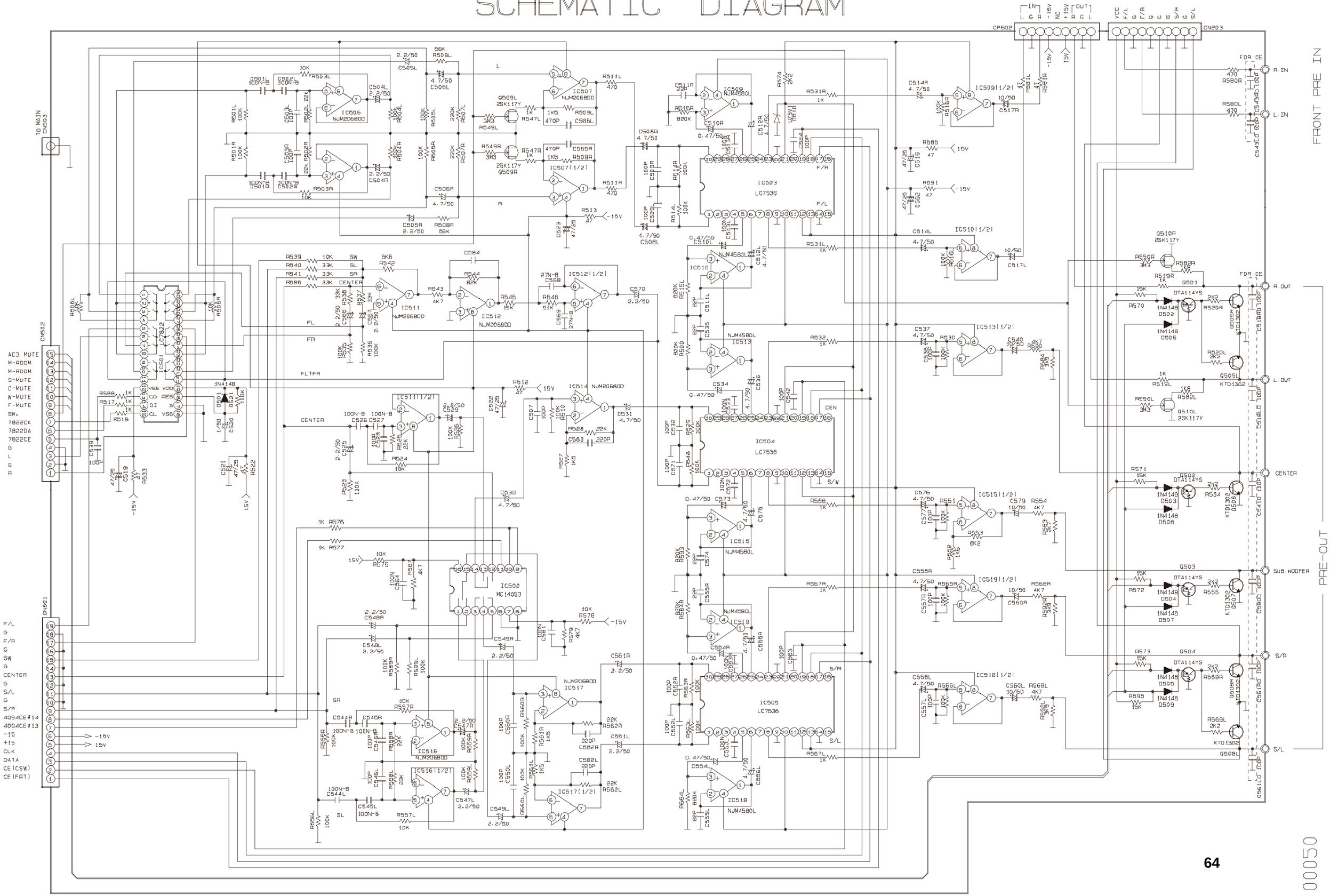

SCHEMATIC

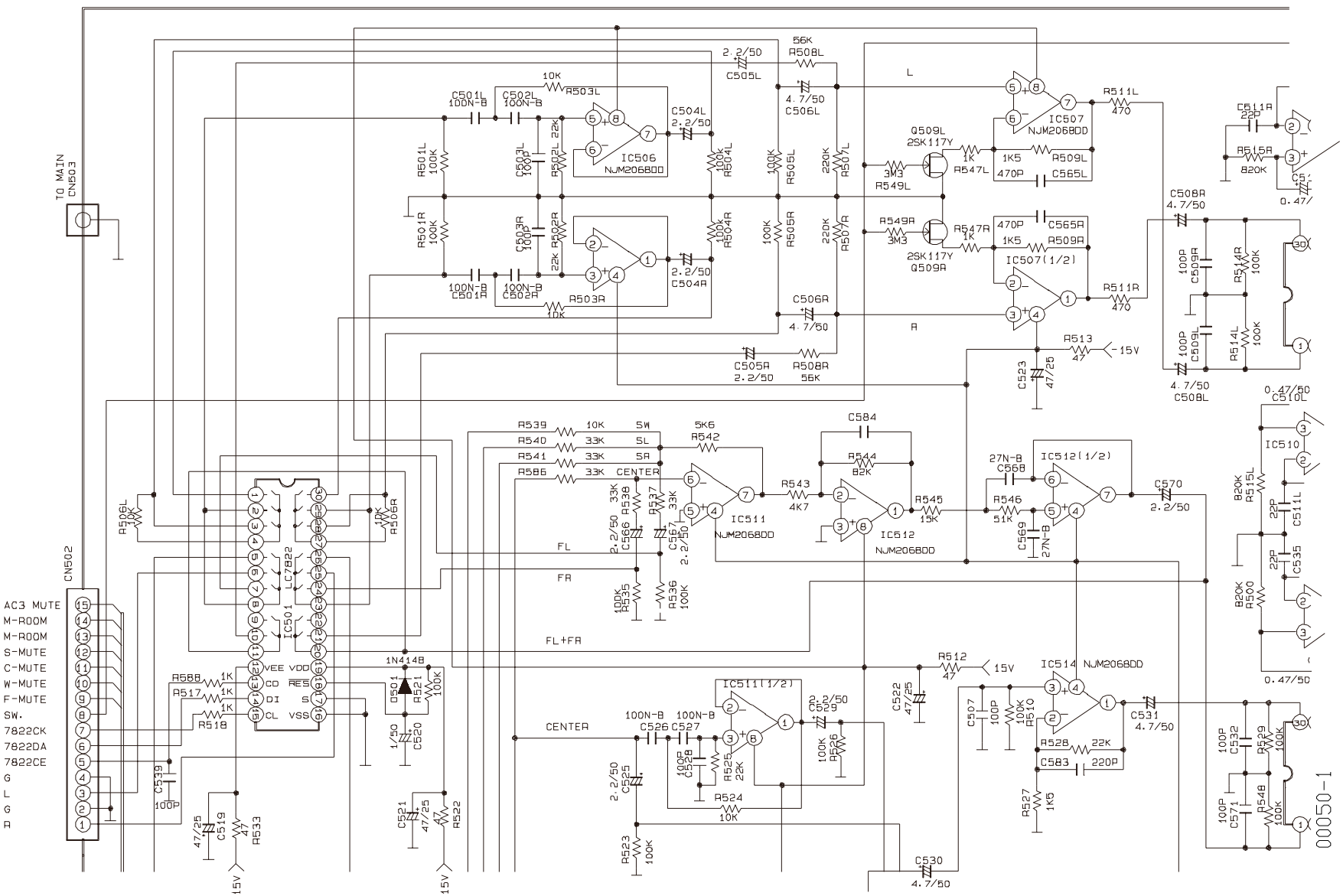
TO MAIN CN503
CN502
AC3 MUTE
M-ROOM
M-ROOM
S-MUTE
C-MUTE
W-MUTE
F-MUTE
SW.
7822CK
7822DA
7822CE
G
L
G
R
IC501 LC7822
IC506 NJM2068DD
IC507 NJM2068DD
IC507(1/2)
IC510
IC511 NJM2068DD
IC511(1/2)
IC512 NJM2068DD
IC512(1/2)
IC514 NJM2068DD
Q501
Q509L 2SK117Y
Q509R 2SK117Y
1N414B
VEE VDD
CO RES
DI S
CL VSS
L
R
FL
FR
FL+FR
CENTER
-15V
15V
00050-1

IC DIAGRAM

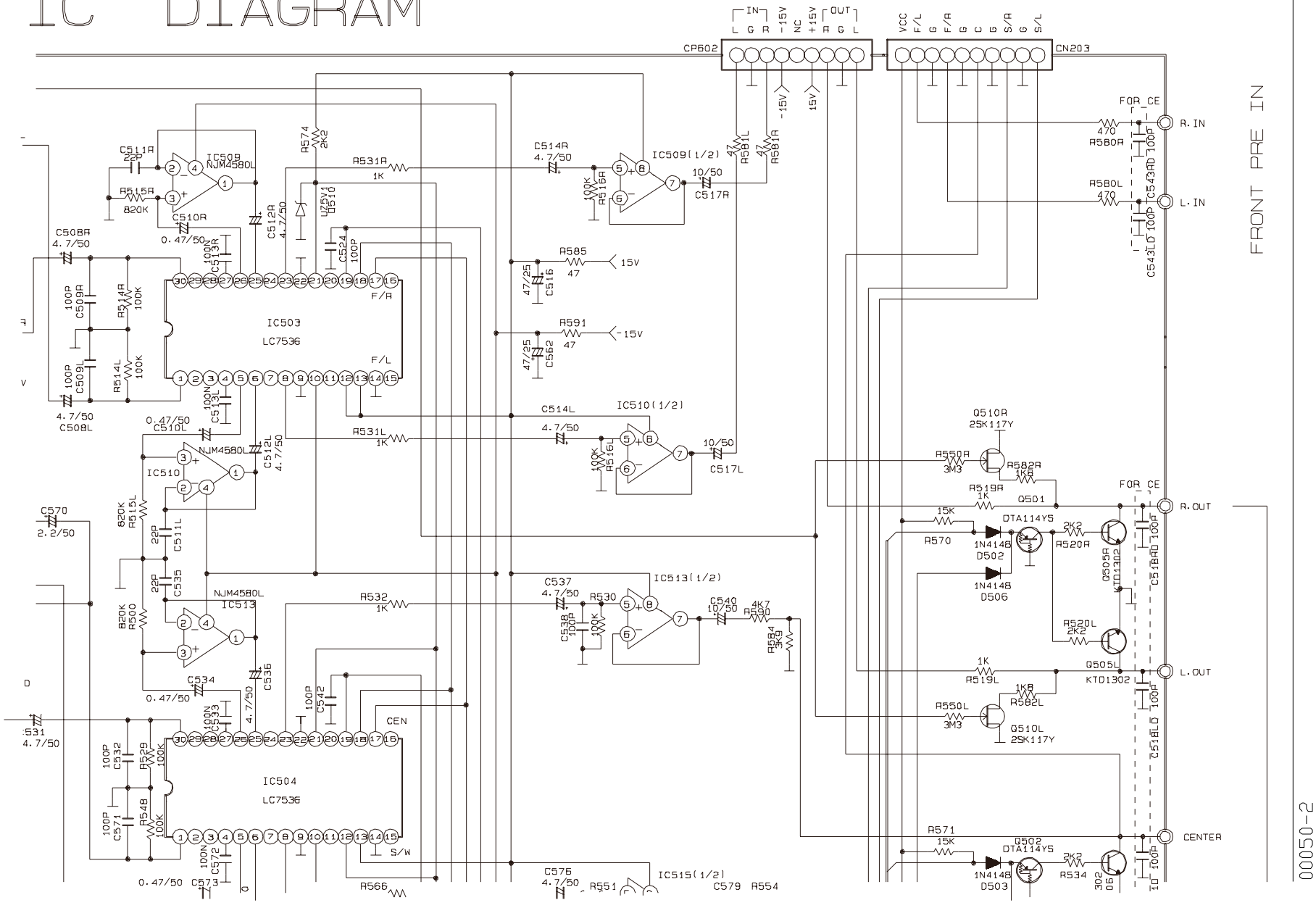
CP602
IN
L G R -15V NC +15V
OUT
R G L
CN203
VCC F/L G F/R G C G S/R G S/L
FRONT PRE IN
FOR CE
R.IN
L.IN
R.OUT
L.OUT
CENTER
IC503
LC7536
F/R
F/L
IC504
LC7536
CEN
S/W
IC509
NJM4580L
IC509(1/2)
IC510
NJM4580L
IC510(1/2)
IC513
NJM4580L
IC513(1/2)
IC515(1/2)
Q501
DTA114YS
Q502
DTA114YS
Q505R
KTD1302
Q505L
KTD1302
Q510R
2SK117Y
Q510L
2SK117Y
D502
1N4148
D506
1N4148
D503
1N4148
R570
15K
R571
15K
R580R
470
R580L
470
R582R
1KB
R582L
1KB
R585
47
R591
47
R516R
100K
R516L
100K
R517R
10/50
R517L
10/50
R519R
1K
R519L
1K
R520R
2K2
R520L
2K2
R530
100K
R534
2K2
R540
4K7
R550R
3M3
R550L
3M3
C517R
10/50
C517L
10/50
C543R
100P
C543L
100P
C561R
100P
C561L
100P
C570
2.2/50
C579
R554
R566
R551
00050-2

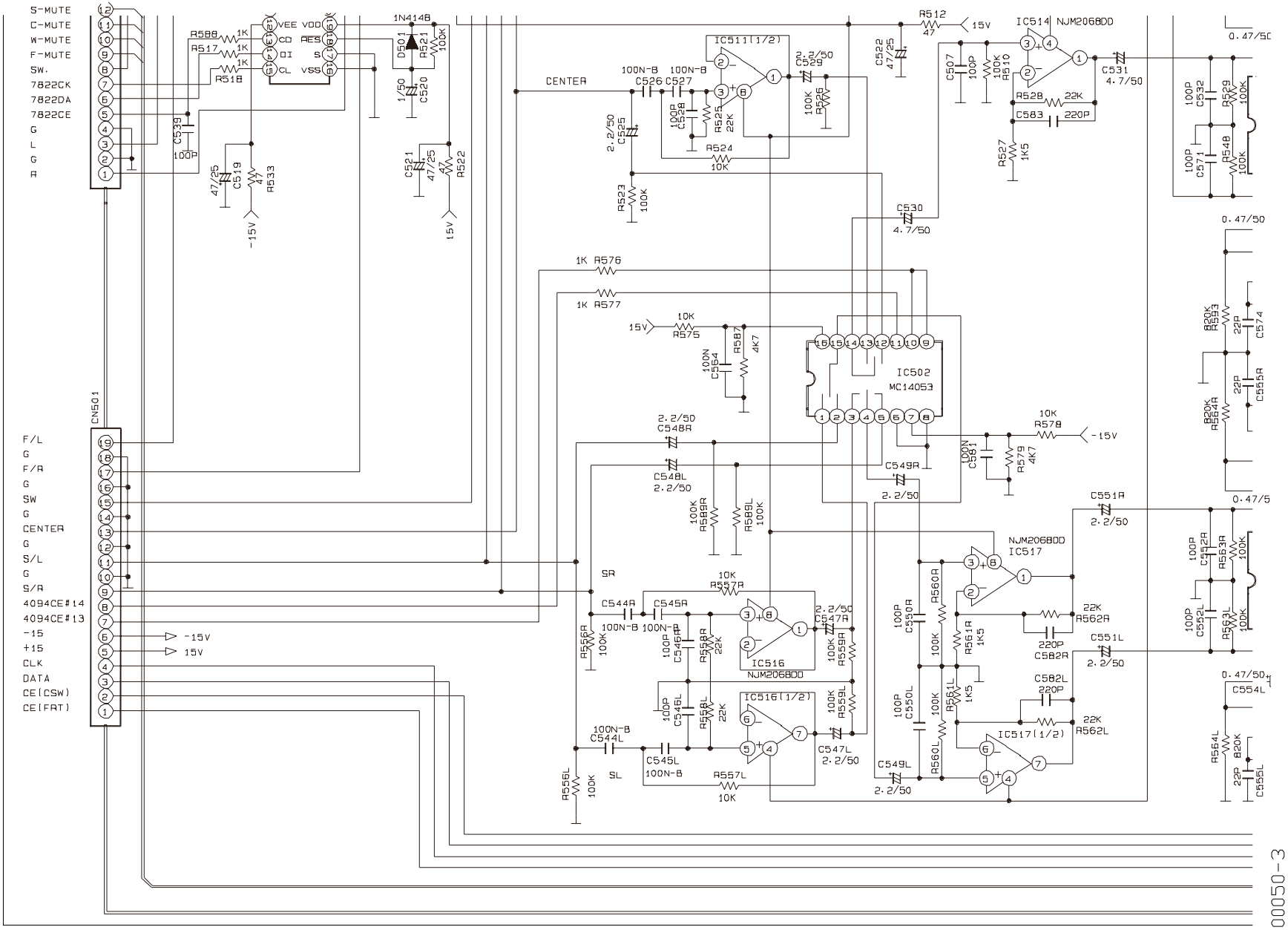
S-MUTE
C-MUTE
W-MUTE
F-MUTE
SW.
7822CK
7822DA
7822CE
G
L
G
R
CN501
F/L
G
F/R
G
SW
G
CENTER
G
S/L
G
S/R
4094CE#14
4094CE#13
-15
+15
CLK
DATA
CE(CSW)
CE(FRT)
VEE
VDD
CD
RES
DI
S
CL
VSS
1N4148
D501
R521
100K
R588
R517
R518
1K
C539
100P
C519
47/25
R533
-15V
C520
1/50
C521
47/25
R522
15V
CENTER
IC511(1/2)
C526
C527
100N-B
C528
100P
R525
22K
R524
10K
C529
2.2/50
R526
100K
C525
2.2/50
R523
100K
C522
47/25
R512
47
15V
IC514
NJM2068DD
C507
100P
R510
100K
R528
22K
C583
220P
R527
1K5
C531
4.7/50
C530
4.7/50
0.47/50
C532
100P
R529
100K
C571
100P
R548
100K
1K R576
1K R577
15V
R575
10K
R587
4K7
C564
100N
IC502
MC14053
R578
10K
-15V
C581
100N
R579
4K7
C549R
2.2/50
C548R
2.2/50
C548L
2.2/50
R589R
100K
R589L
100K
SR
R557R
10K
C544R
100N-B
C545R
100N-B
R556R
100K
C546R
100P
R558R
22K
IC516
NJM2068DD
C547R
2.2/50
R559R
100K
C546L
100P
R558L
22K
IC516(1/2)
R559L
100K
C547L
2.2/50
C544L
100N-B
C545L
100N-B
R556L
100K
SL
R557L
10K
C549L
2.2/50
C550R
100P
R560R
100K
R561R
1K5
NJM2068DD
IC517
C551R
2.2/50
R562R
22K
C582R
220P
C551L
2.2/50
C550L
100P
R560L
100K
R561L
1K5
C582L
220P
IC517(1/2)
R562L
22K
0.47/5
C552R
100P
R563R
100K
C552L
100P
R563L
100K
0.47/50
C554L
R564L
820K
C555L
22P
R593
820K
C574
22P
C555R
22P
R564R
820K

00050-3

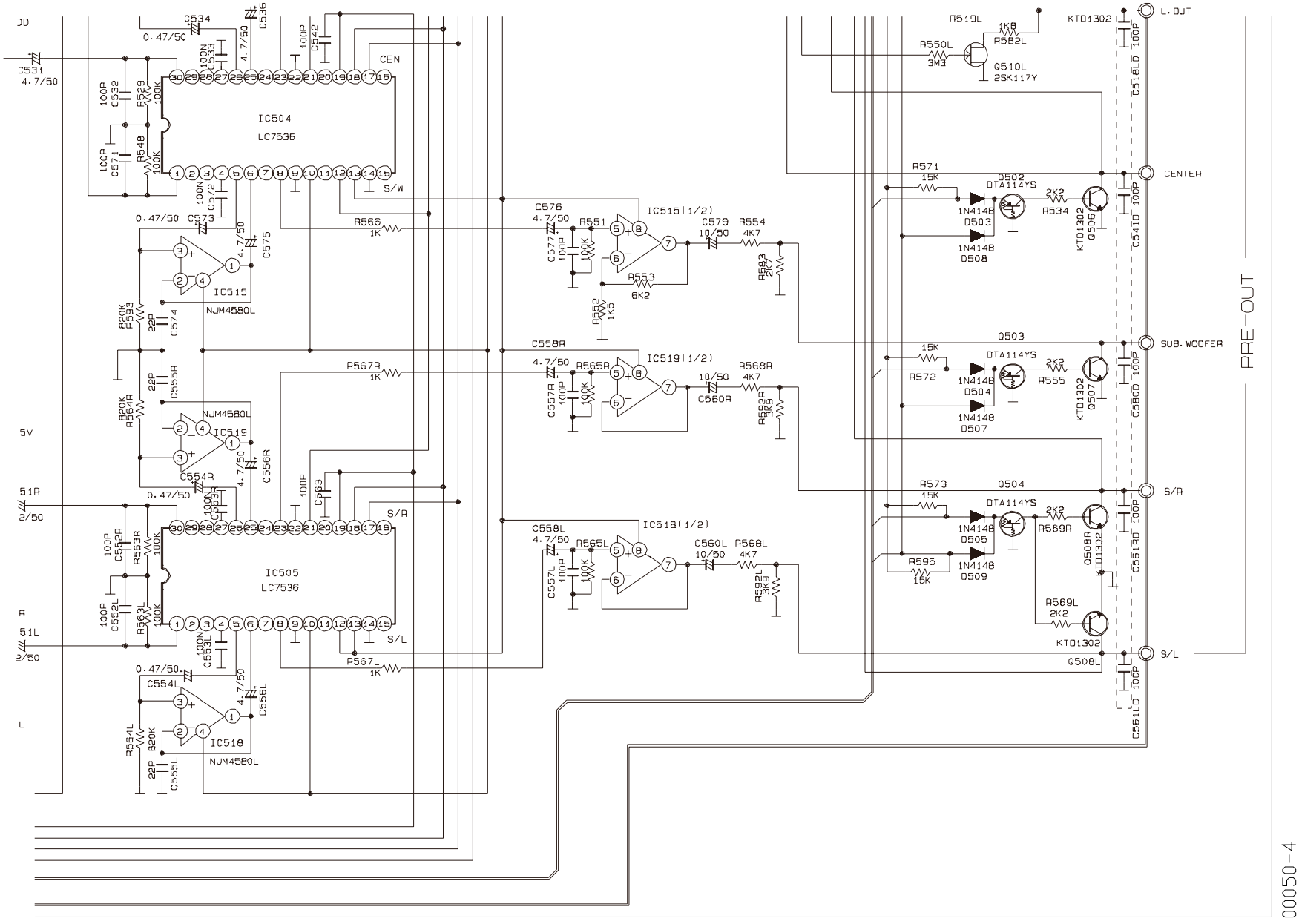
IC504
LC7536
IC505
LC7536
IC515
NJM4580L
IC519
NJM4580L
IC518
NJM4580L
IC515(1/2)
IC519(1/2)
IC518(1/2)
CEN
S/W
S/R
S/L
L.OUT
CENTER
SUB.WOOFER
S/A
S/L
PRE-OUT
Q502
DTA114YS
Q503
DTA114YS
Q504
DTA114YS
Q510L
25K117Y
KTD1302
1N4148
00050-4

SCHEMATIC DIAGRAM

AC-3 4001007700

IC803 PM4007A

IC804 KM68257CJ

IC807 MC56009F

IC810 uPD78044

IC808 CS4226

IC805 NJM2068(1/2)

IC806 NJM2068(2/1)

IC809 74HCU04

IC811 HY534256

IC812 HY534256

IC813 74HC04

IC814 NJM2068(2/2)

IC815 NJM2068(1/2)

IC816 NJM2068(2/2)

REVICED

00051

SCHEMATIC DIA

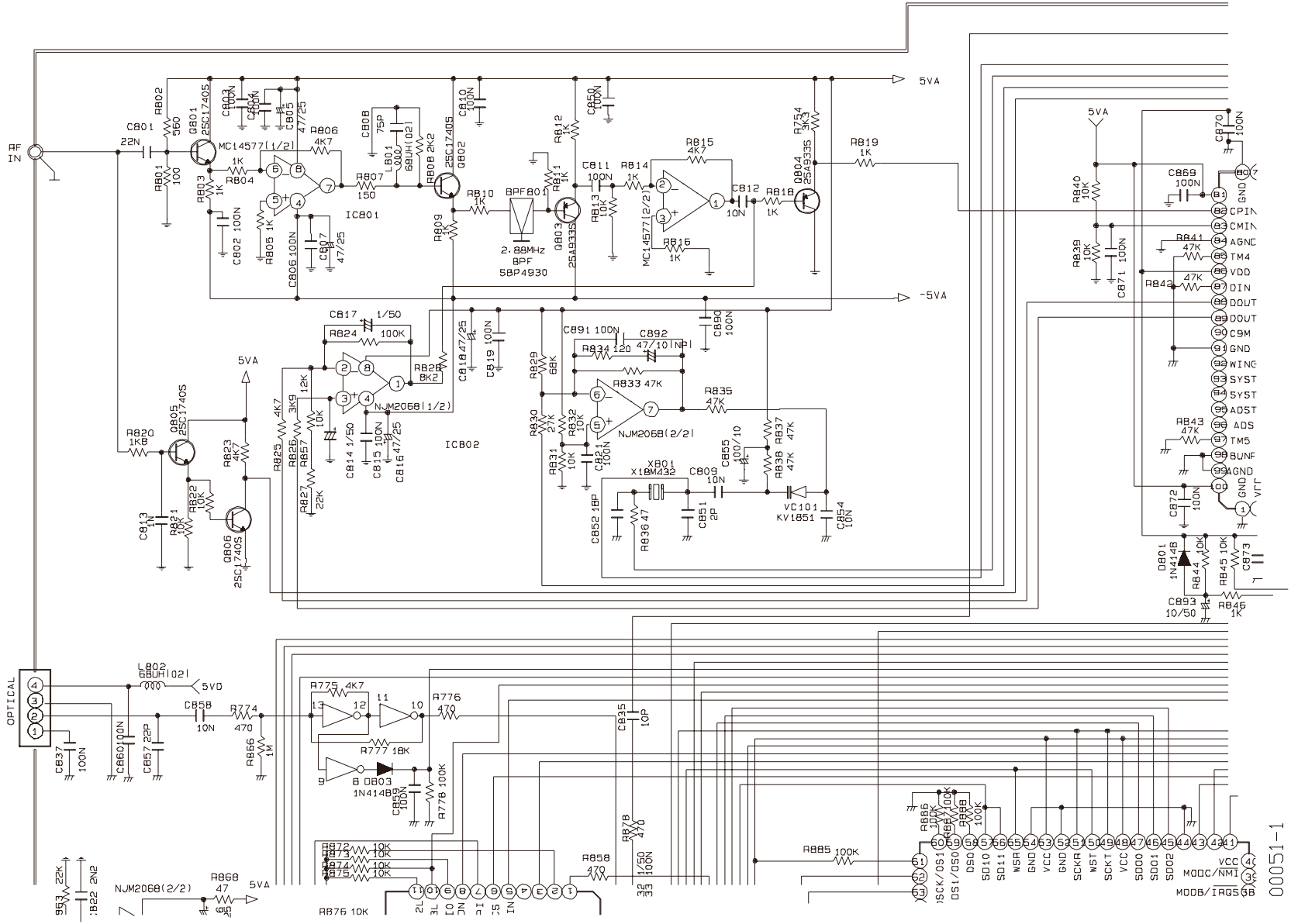

DIAGRAM

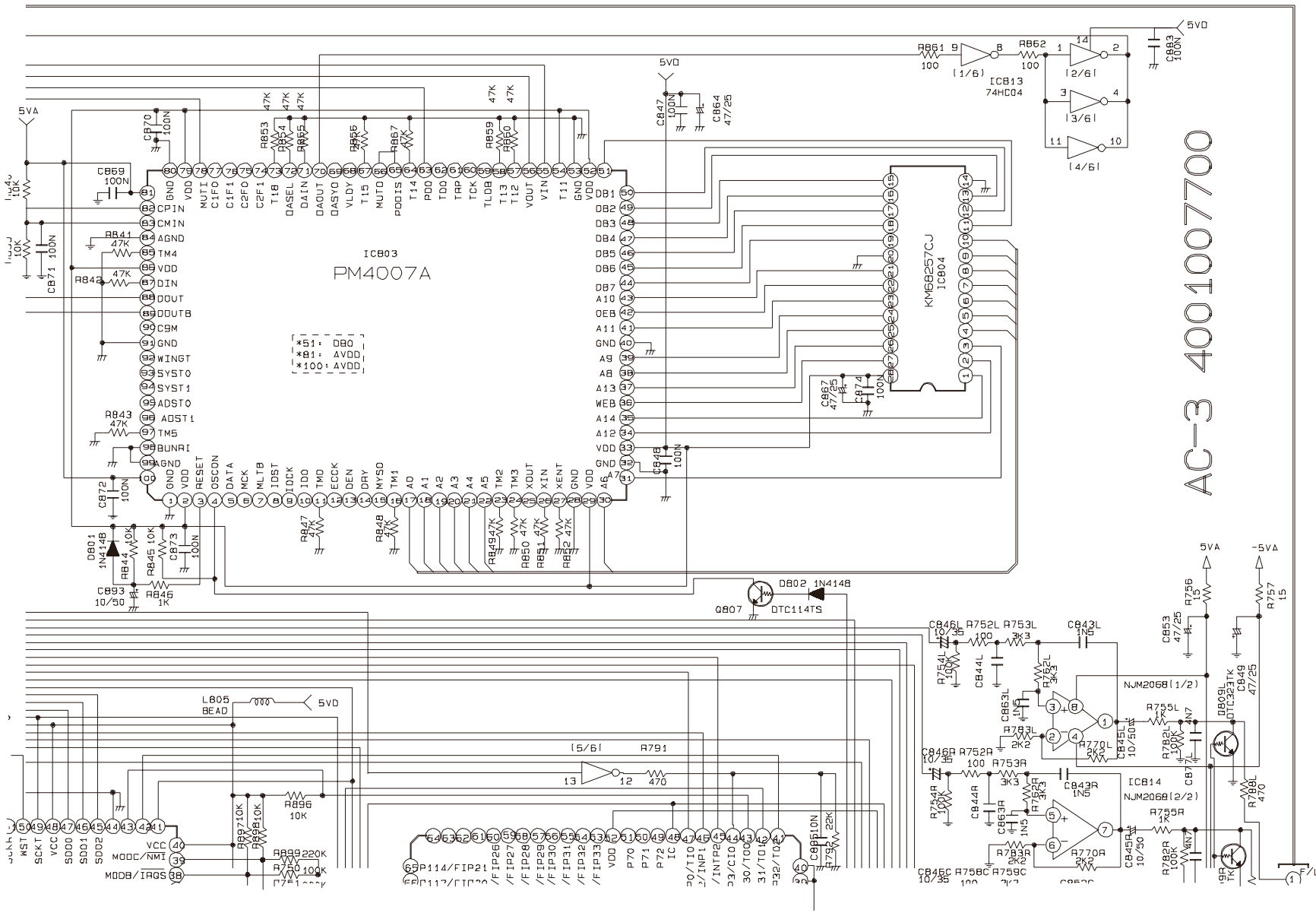
AC-3 400100700
00051-2
IC803
PM4007A
IC804
KM68257CJ
74HC04
NJM2068(1/2)
NJM2068(2/2)
5VA
5VD
-5VA

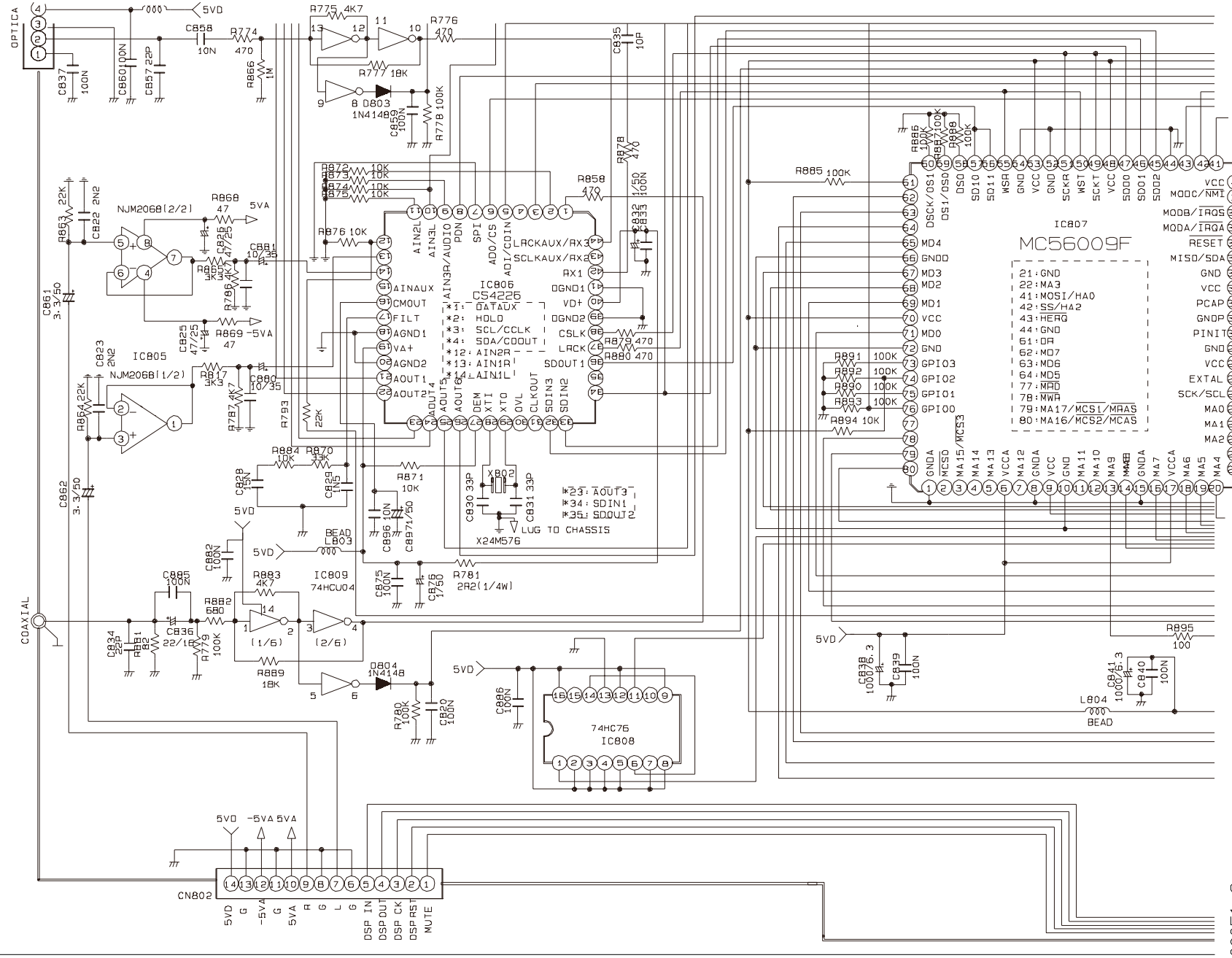
OPTICA
COAXIAL
IC805
NJM2068(2/2)
NJM2068(1/2)
IC806
CS4226
IC807
MC56009F
IC809
74HCU04
IC808
74HC76
X24M576
X802
LUG TO CHASSIS
CN802
5VD
-5VA
5VA
BEAD
L803
L804
BEAD
00051-3

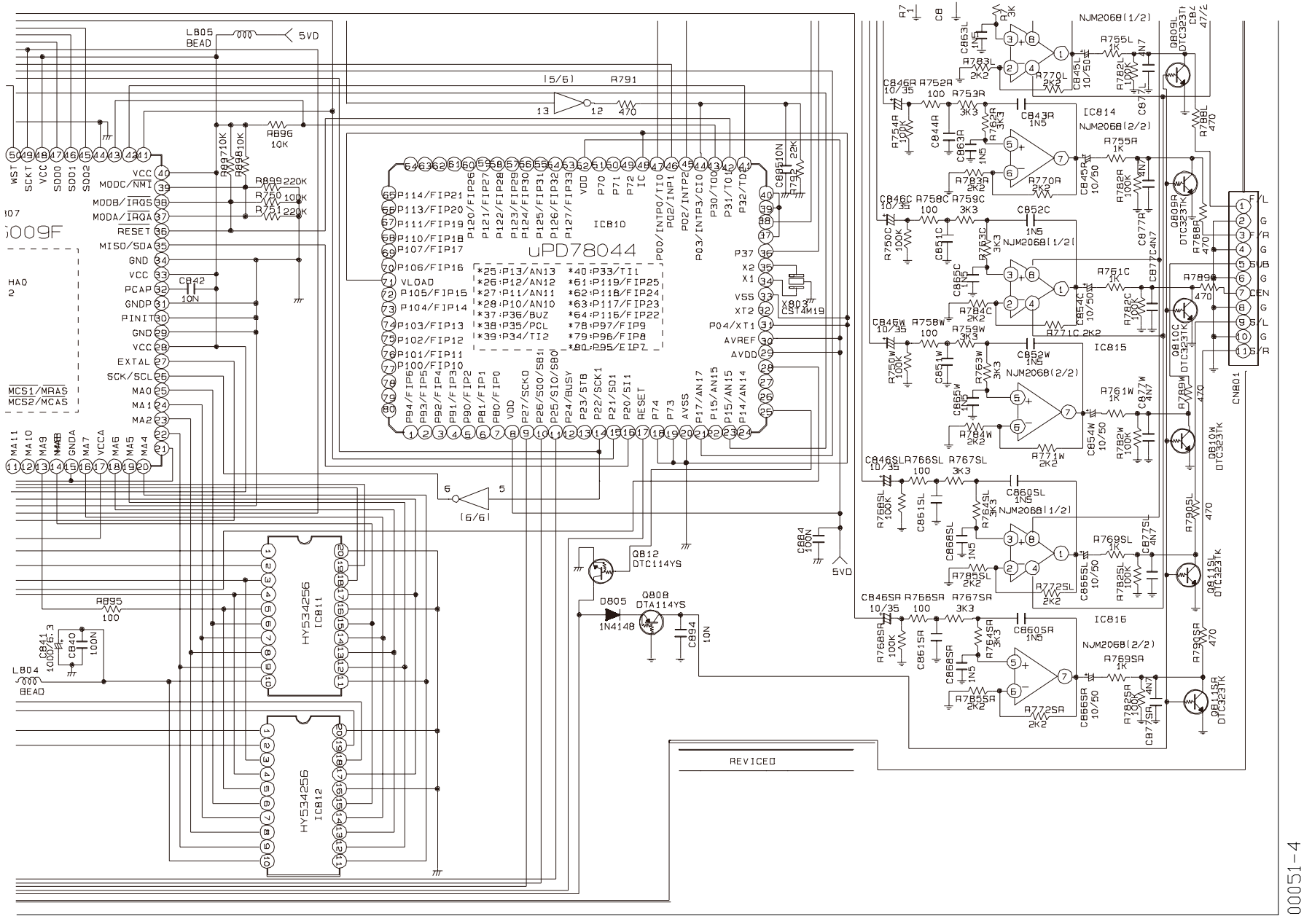
uPD78044
ICB10
HY534256
IC811
HY534256
IC812
NJM2068(1/2)
NJM2068(2/2)
IC814
IC815
IC816
REVICED
00051-4

SCHEMATIC DIAGRAM

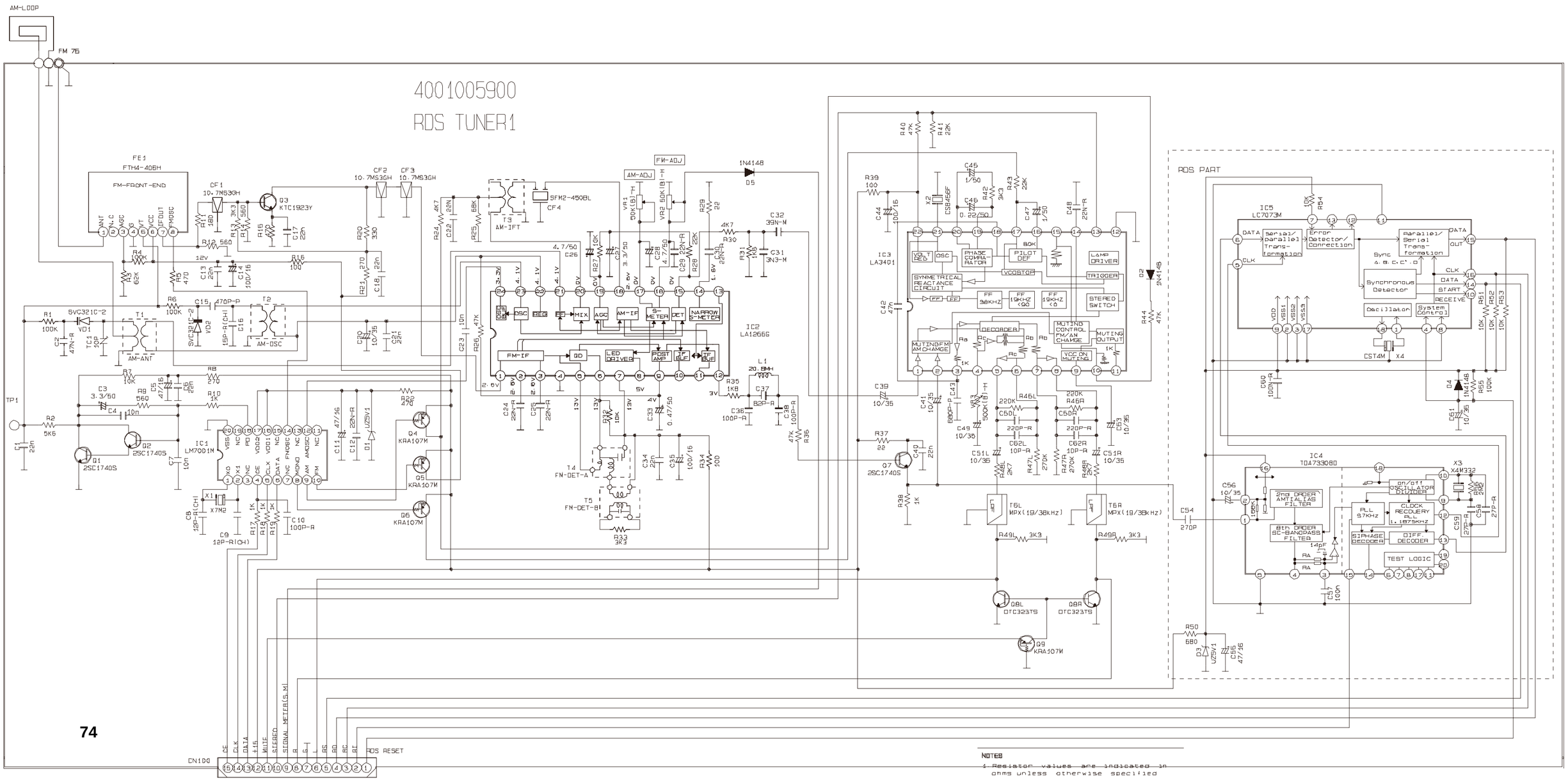

SCHEMATIC DIA

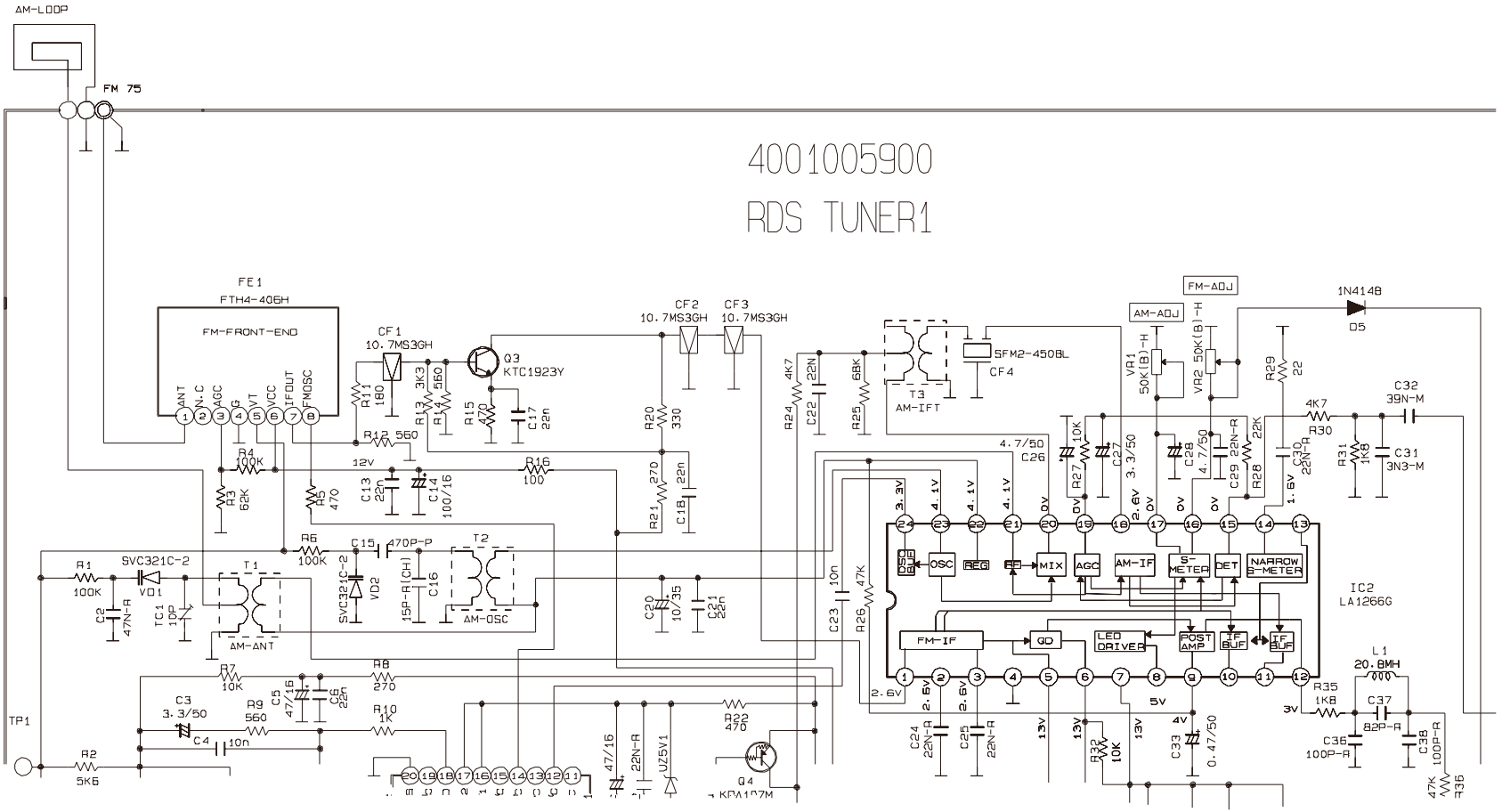

DIAGRAM

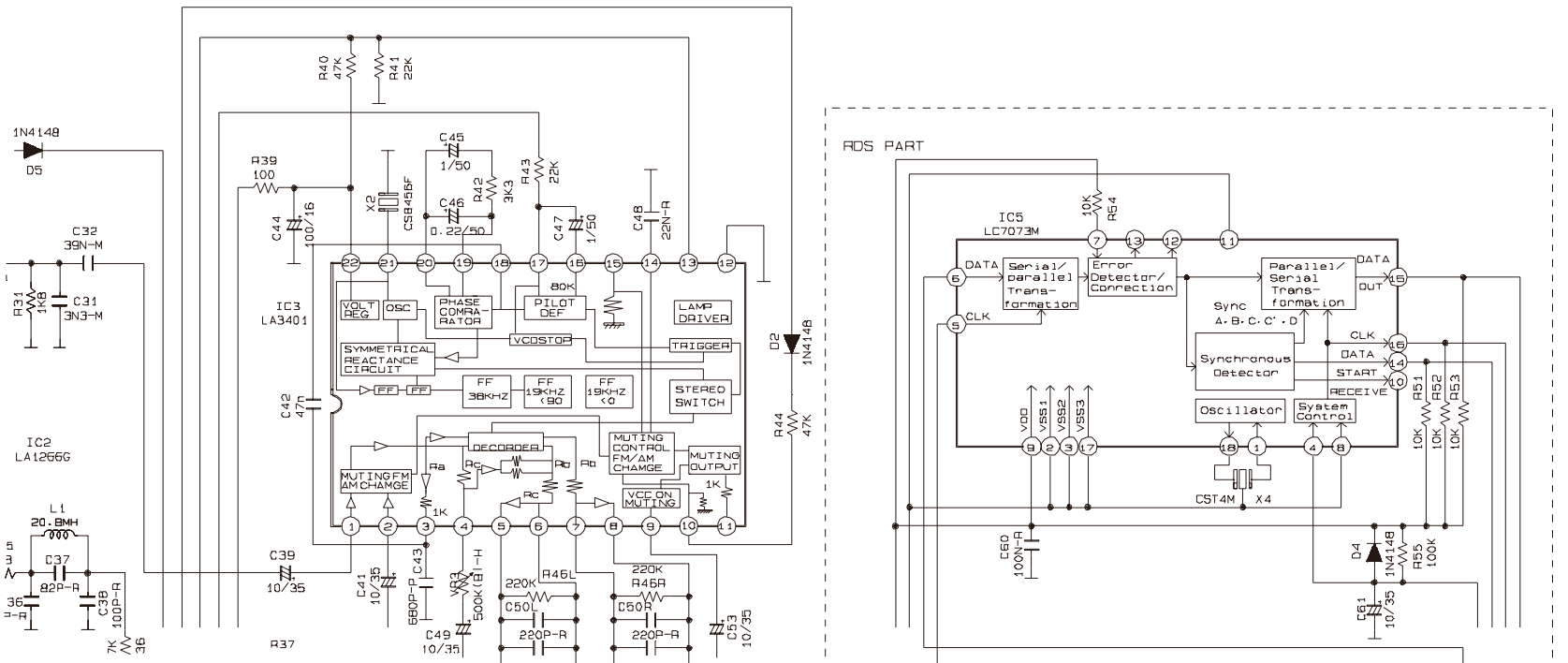

00052-2

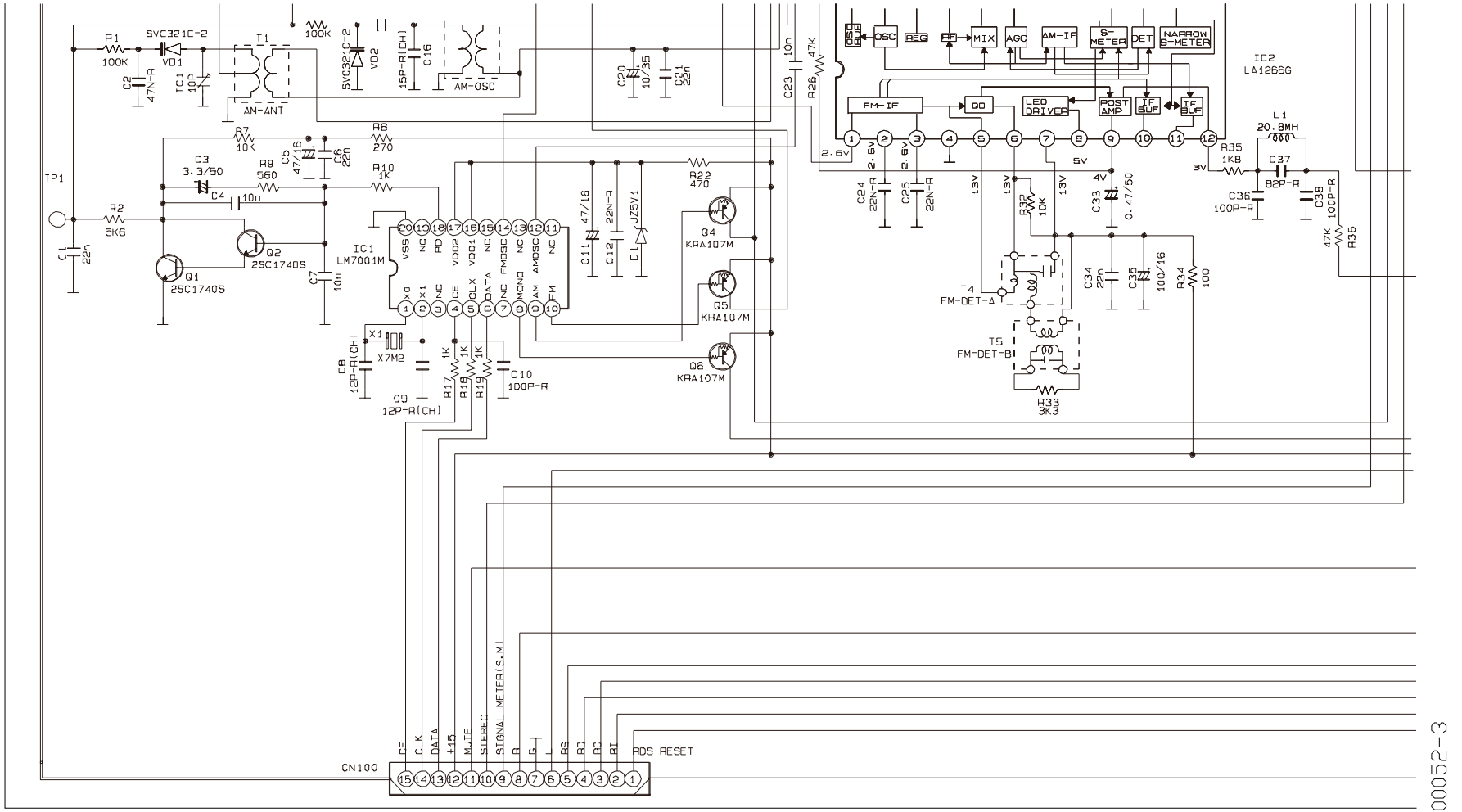

R1
100K
SVC321C-2
VD1
C2
47N-R
TC1
10P
T1
AM-ANT
100K
SVC321C-2
VD2
15P-R(CH)
C16
AM-OSC
C20
10/35
C21
22n
C23
10n
R26
47K
OSC BUF
OSC
REG
RF
MIX
AGC
AM-IF
S-METER
DET
NARROW S-METER
IC2
LA1266G
FM-IF
QD
LED DRIVER
POST AMP
IF BUF
IF BUF
L1
20.8MH
R35
1K8
C37
82P-R
C36
100P-R
C38
100P-R
R36
47K
R7
10K
R8
270
C5
47/16
C6
22n
C3
3.3/50
R9
560
R10
1K
C4
10n
TP1
R2
5K6
C1
22n
Q1
2SC1740S
Q2
2SC1740S
C7
10n
IC1
LM7001M
VSS
NC
PD
VDD2
VDD1
NC
FMOSC
NC
AMOSC
NC
X0
X1
NC
CE
CLX
DATA
NC
MONO
AM
FM
C11
47/16
C12
22N-R
D1
UZ5V1
R22
470
Q4
KRA107M
Q5
KRA107M
Q6
KRA107M
X1
X7M2
C8
12P-R(CH)
C9
12P-R(CH)
R17
1K
R18
1K
R19
1K
C10
100P-R
C24
22N-R
C25
22N-R
R32
10K
C33
0.47/50
T4
FM-DET-A
T5
FM-DET-B
R33
3K3
C34
22n
C35
100/16
R34
100
2.6V
2.6V
2.6V
13V
13V
13V
5V
4V
3V
CN100
CE
CLK
DATA
+15
MUTE
STEREO
SIGNAL METER(S.M)
R
G
L
RS
RD
RC
RT
RDS RESET

00052-3

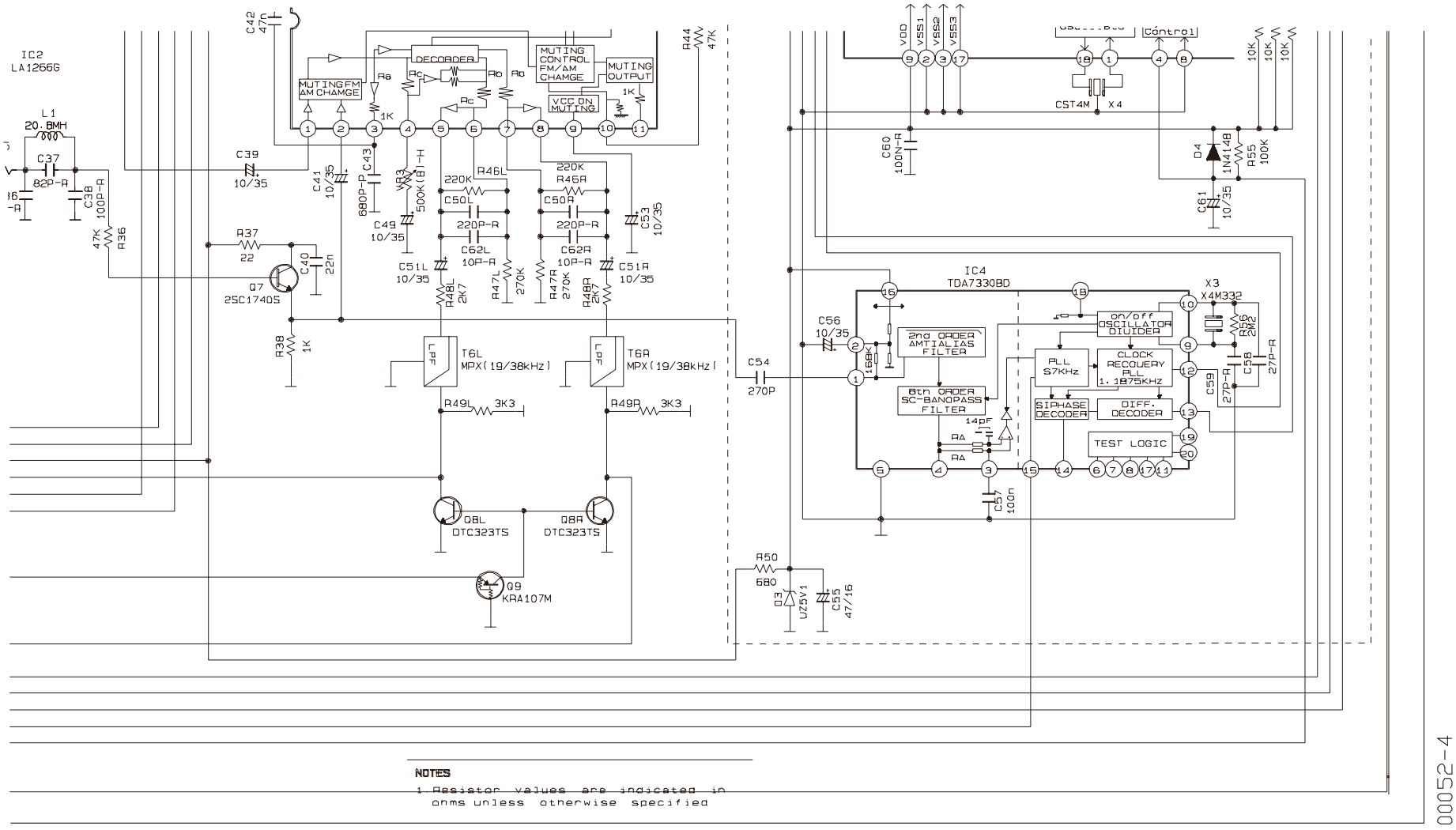
IC2
LA1266G
L1
20.8MH
C37
82P-R
C38
100P-R
C39
10/35
C40
22n
R36
47K
R37
22
C41
10/35
C42
47n
C43
680P-P
VR3
500K(B)-H
C49
10/35
C50L
220P-R
C50A
220P-R
C51L
10/35
C51A
10/35
C53
10/35
C62L
10P-R
C62A
10P-R
R46L
220K
R46A
220K
R47L
270K
R47A
270K
R48L
2K7
R48A
2K7
R38
1K
R44
47K
R49L
3K3
R49A
3K3
Q7
2SC1740S
T6L
MPX(19/38kHz)
T6A
MPX(19/38kHz)
Q8L
DTC323TS
Q8A
DTC323TS
Q9
KRA107M
DECODER
MUTING FM AM CHAMGE
MUTING CONTROL FM/AM CHAMGE
MUTING OUTPUT
VCC ON MUTING
Ra
Rb
Rc
1K
IC4
TDA7330BD
2nd ORDER AMTIALIAS FILTER
8th ORDER SC-BANDPASS FILTER
PLL 57KHz
CLOCK RECOVERY PLL 1.1875KHz
SIPHASE DECODER
DIFF. DECODER
TEST LOGIC
on/off OSCILLATOR DIVIDER
VDD
VSS1
VSS2
VSS3
Control
CST4M
X4
X3
X4M332
C56
10/35
C54
270P
C55
47/16
C57
100n
C58
27P-R
C59
27P-R
C60
100N-R
C61
10/35
R50
680
D3
UZ5V1
D4
1N4148
R55
100K
R56
2K2
10K
168K
14pF
NOTES
1. Resistor values are indicated in ohms unless otherwise specified

00052-4

WIRING DIAGRAM

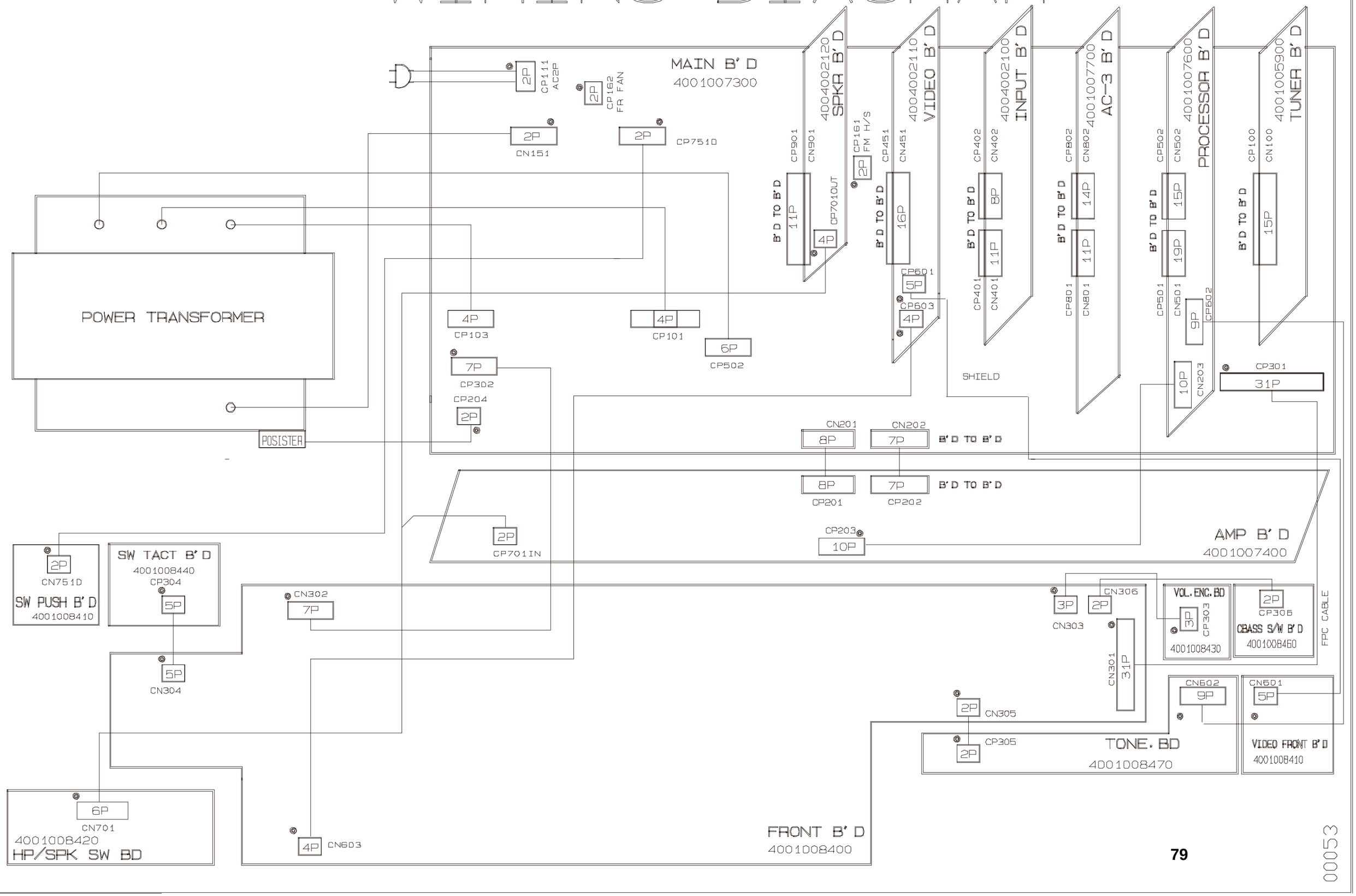

00053

WIRING C

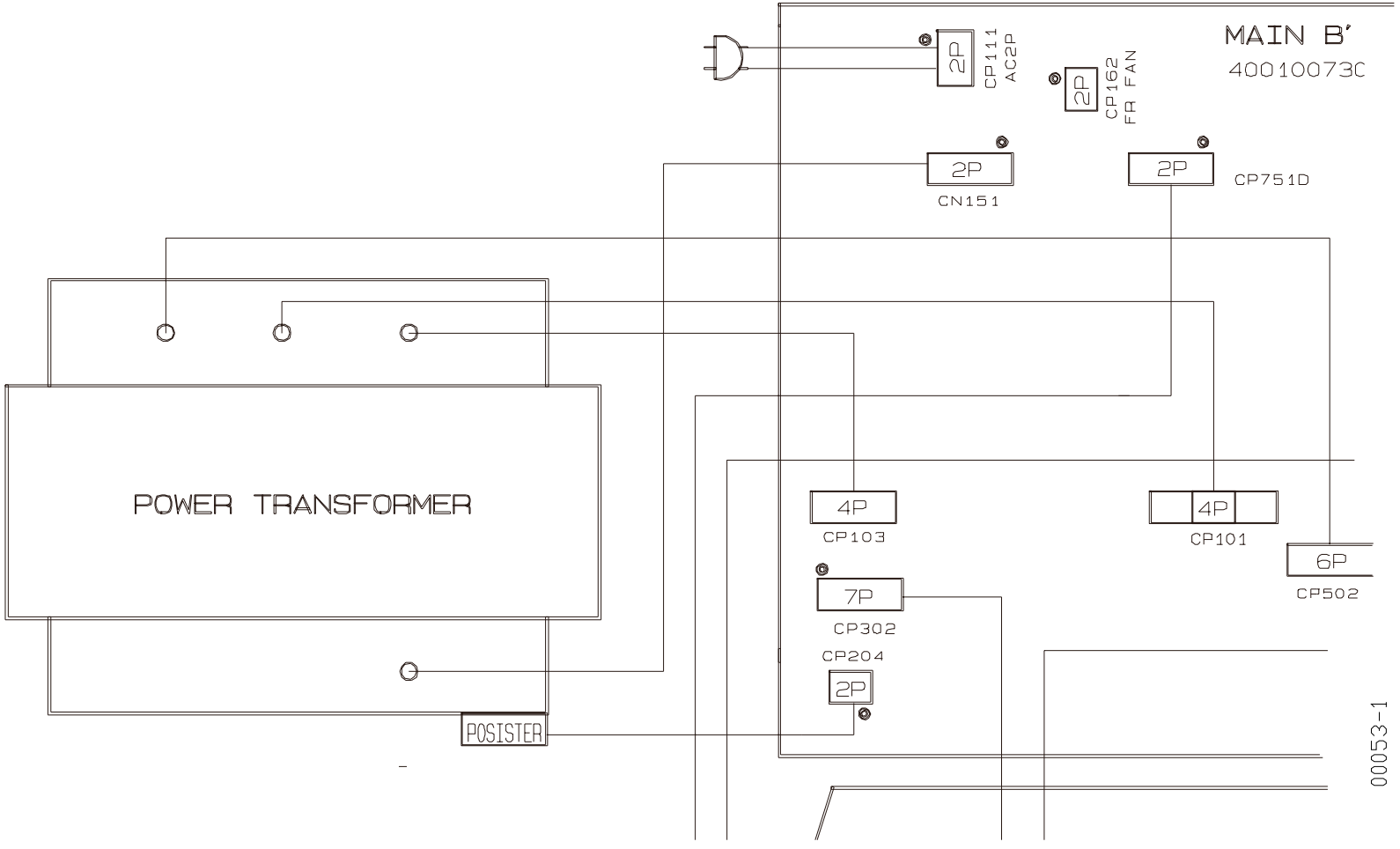
MAIN B'
40010073C
2P
CP111
AC2P
2P
CP162
FR FAN
2P
CN151
2P
CP751D
POWER TRANSFORMER
4P
CP103
4P
CP101
6P
CP502
7P
CP302
CP204
2P
POSISTER
00053-1

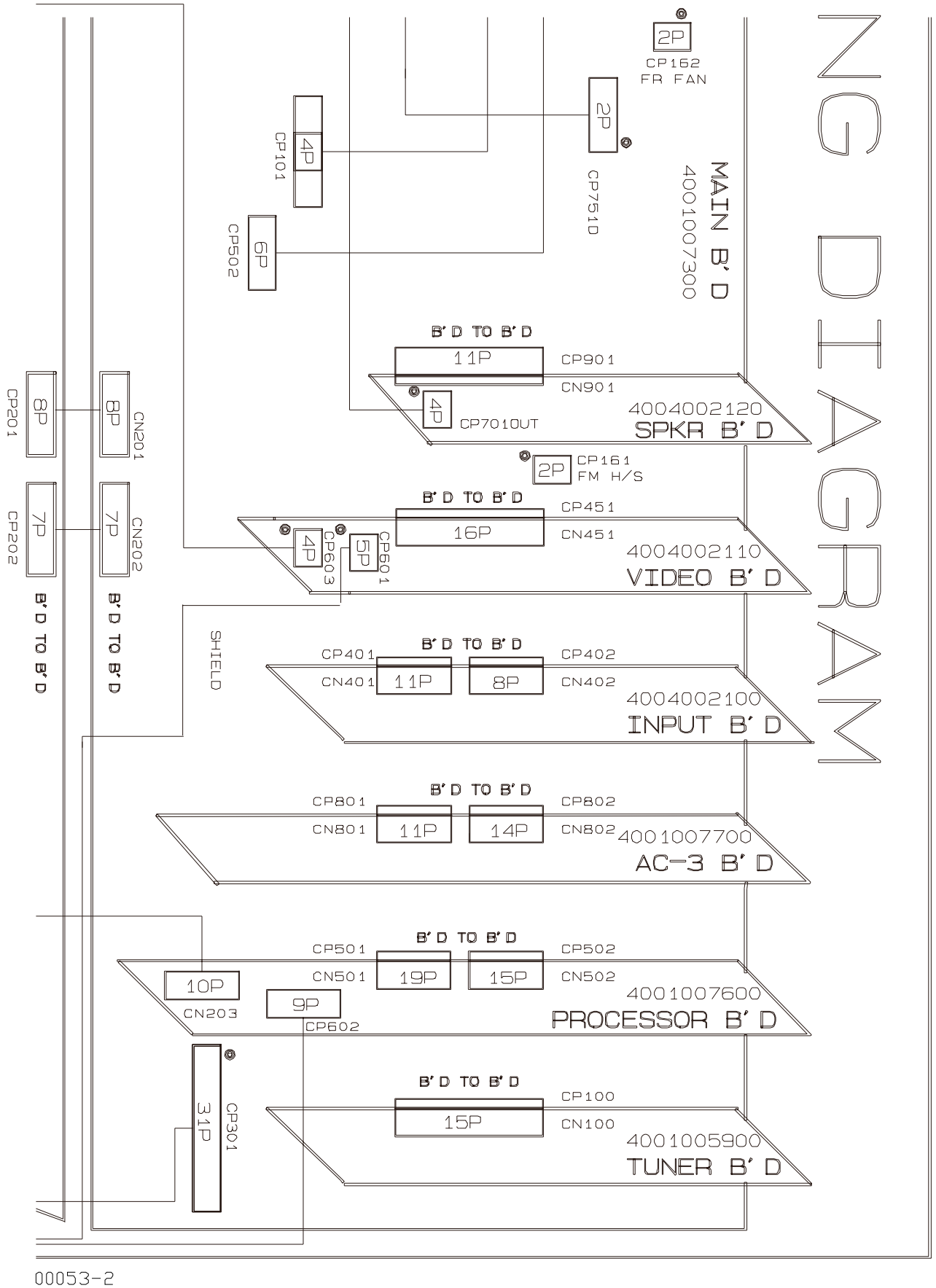
NG DIAGRAM
MAIN B' D
4001007300
2P
CP162
FR FAN
2P
CP751D
4P
CP101
6P
CP502
B' D TO B' D
11P
CP901
CN901
4P
CP7010UT
4004002120
SPKR B' D
2P
CP161
FM H/S
B' D TO B' D
CP451
16P
CN451
4P
CP603
5P
CP601
4004002110
VIDEO B' D
8P
CP201
8P
CN201
7P
CP202
7P
CN202
B' D TO B' D
B' D TO B' D
SHIELD
CP401
B' D TO B' D
CP402
CN401
11P
8P
CN402
4004002100
INPUT B' D
CP801
B' D TO B' D
CP802
CN801
11P
14P
CN802
4001007700
AC-3 B' D
CP501
B' D TO B' D
CP502
CN501
19P
15P
CN502
10P
CN203
9P
CP602
4001007600
PROCESSOR B' D
31P
CP301
B' D TO B' D
CP100
15P
CN100
4001005900
TUNER B' D

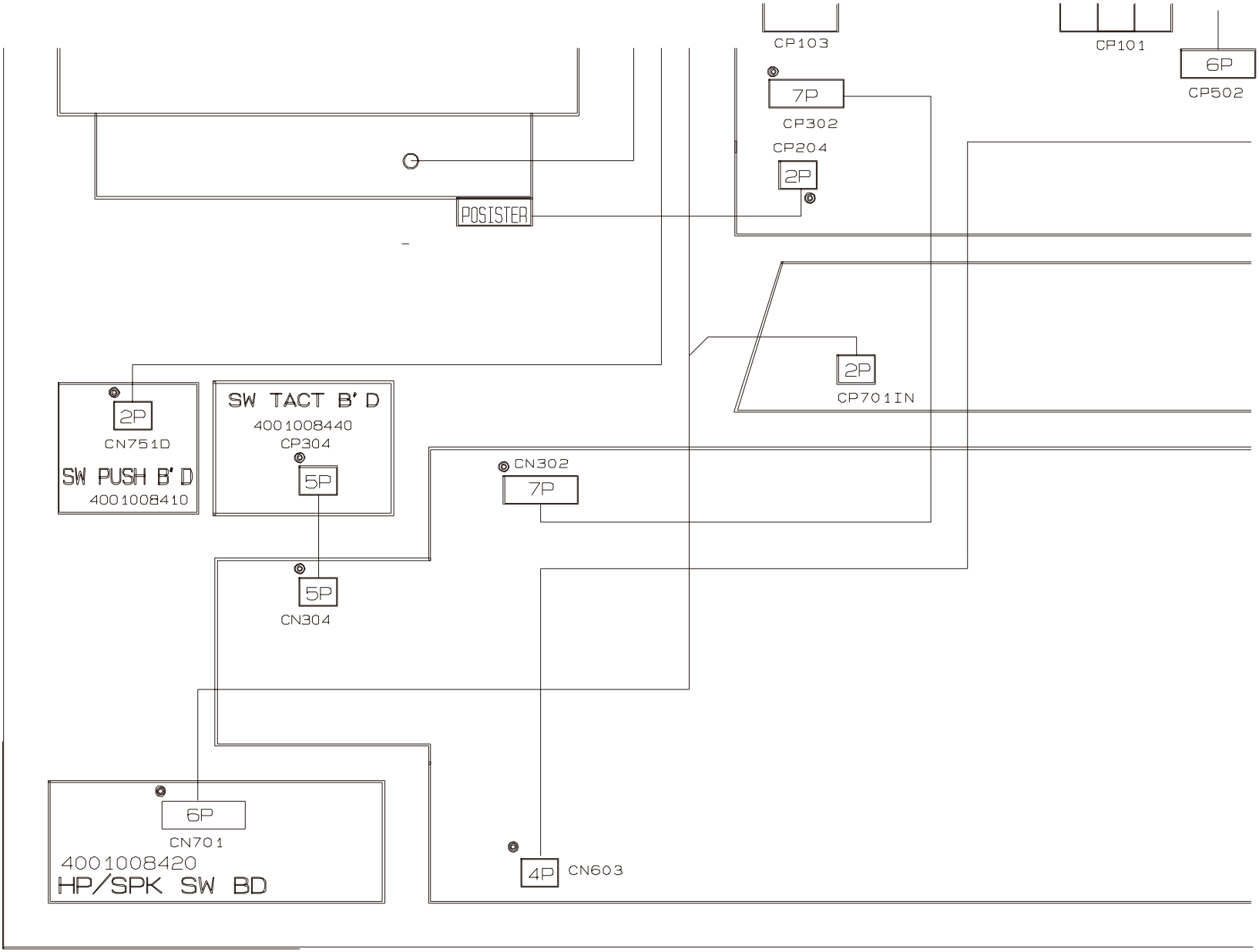
CP103
CP101
6P
CP502
7P
CP302
CP204
2P
POSISTER
2P
CP701IN
2P
CN751D
SW PUSH B'D
4001008410
SW TACT B'D
4001008440
CP304
5P
CN302
7P
5P
CN304
6P
CN701
4001008420
HP/SPK SW BD
4P
CN603
00053-3

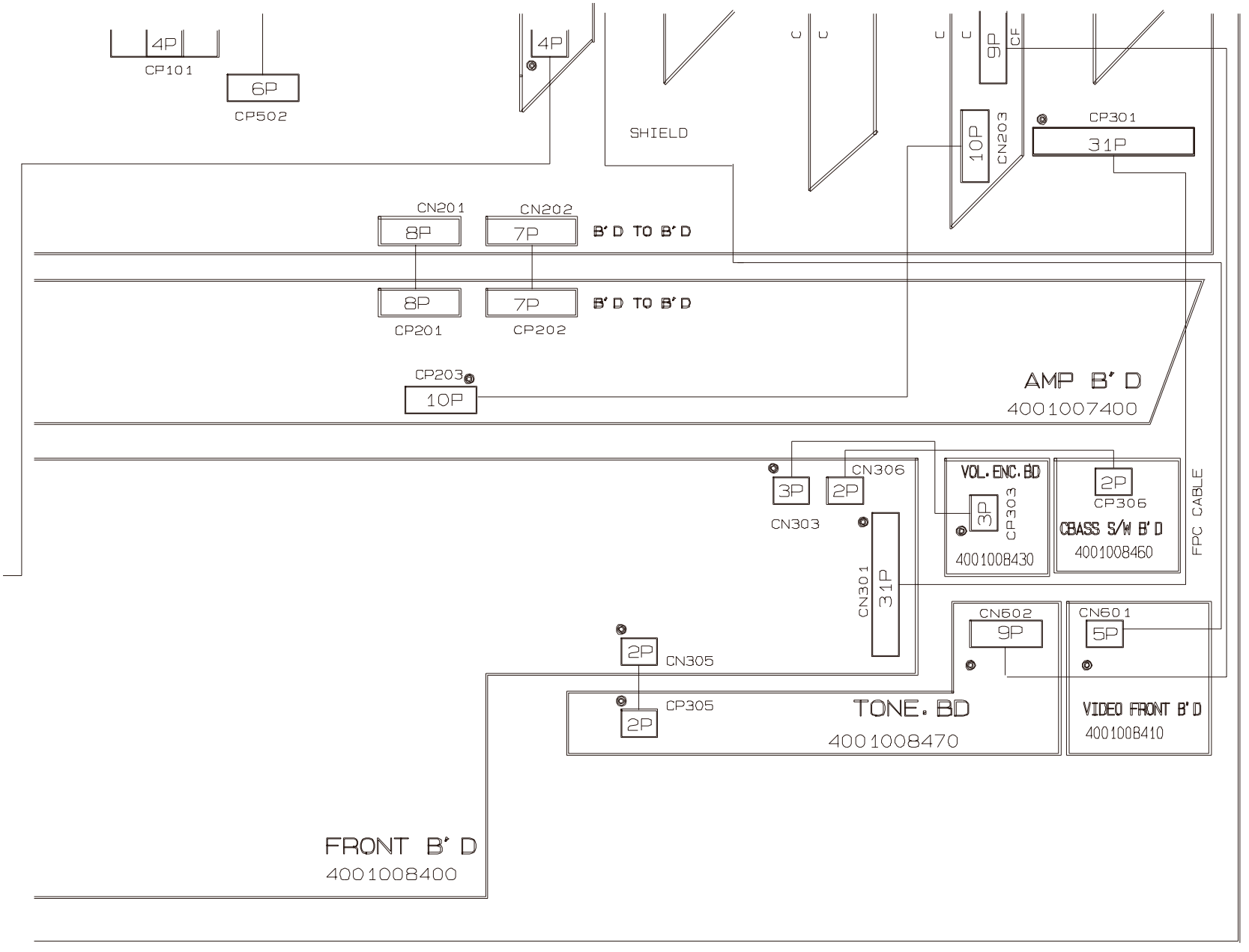
4P
CP101
6P
CP502
4P
SHIELD
9P
CF
10P
CN203
CP301
31P
CN201
8P
CN202
7P
B' D TO B' D
8P
CP201
7P
CP202
B' D TO B' D
CP203
10P
AMP B' D
4001007400
3P
CN303
2P
CN306
CN301
31P
VOL. ENC. BD
3P
CP303
4001008430
2P
CP306
CBASS S/W B' D
4001008460
FPC CABLE
CN602
9P
CN601
5P
2P
CN305
2P
CP305
TONE. BD
4001008470
VIDEO FRONT B' D
4001008410
FRONT B' D
4001008400
00053-4